Important information
Serious risk of injury

When working on the engine, e.g. when adjusting the drive belts and clutch, or when changing oil, it is important not to start the engine. The engine could be damaged, but more importantly there is a serious risk of injury.

For this reason, always secure the starting device or disconnect a battery cable before working on the engine. This is especially important if the engine has a remote starter or automatic starting.

WARNING!

This warning symbol and text can be found next to maintenance items where it is particularly important to bear in mind the risk of injury.

Operator's manual
DC09 PDE Industrial engine
en-GB 3 332 954

Issue 12.0

Start of warranty 3
Introduction 4
Certification 4
Power classes 5
Environment and safety 6
Environmental liability 6
Information on parts with particularly hazardous substances 6
Safety 6
Warnings and advisories 8
Engine data plate 13
Component identification 14
Starting and running 15
Checks before first start 15
Checks before driving 15
Starting the engine 15
Driving 16
Engine shutdown. 18
Checks after driving 18
Maintenance 19
Cleaning the engine. 20
Engines with few hours of operation 20
Maintenance intervals 21
Lubrication system 22
Oil grade 22
Oil analysis 24
Checking the oil level 25
Maximum angles of inclination during operation 26
Changing the oil 27
Cleaning the centrifugal oil cleaner 28
Operational testing of the centrifugal oil cleaner 32
Renewal - Rotor, 9 and 13 litre engines 33
Renewing the oil filter. 36
Air cleaner 37
Reading the vacuum indicator. 37
Renewing the air cleaner filter element and safety cartridge 38
Cooling system 39
Coolant 39
Checking the coolant level 45
Checking the coolant's antifreeze and corrosion protection 46
Changing the coolant and cleaning the cooling system 47
Fuel system 55
Cleanliness requirements 55
Checking the fuel level 55
Renewing the water separating prefilter 56
Renewing the fuel filter. 57
Venting the fuel system. 59
Other 63
Checking the drive belt 63
Checking for leakage 64
Checking and adjusting the valve clearance and unit injectors. 65
Quality requirements for fuel 71
Diesel 71
Biodiesel (FAME) 74
Renewable diesel (HVO) 74
Gas-to-liquids (GTL) 74
Preparing the engine for storage 75
Preservative products 75
Preparations for storage 76
Technical data 78
General data 78
Lubrication system. 78
Intake system 79
Cooling system. 79
Fuel system. 79
Electrical system 79
Tightening torque for screw joint 80
Screws and nuts 80
Hose clamps 81
Scania Assistance 82

© Scania CV AB 2025, Sweden

Start of warranty

The more we know about you, your company and your equipment, the more effectively we can adapt our services to you. If you have started to use a new Scania engine, it is very important that you send in the warranty start report to us immediately. Quite simply, we need to register all the details on engine ownership etc., so we can monitor it for you.

You can report the start of the warranty on the Scania website: www.scania.com.

Note:

If you do not send in the warranty report, the engine is not covered by the accompanying Scania warranty.

Also fill in below the details you enter in the warranty report. These details can facilitate contact with a workshop, for example. The engine serial number is on the engine data plate and is also engraved on the cylinder block.

Engine serial number (e.g. 1111111)

Ship ID (for example MMSI 111111111 or IMO 1111111)

Start date (yyyy-mm-dd)

Company name

Contact person

Telephone number

E-mail address

Address

Postcode

Postal town

State/County

Country

© Scania CV AB 2025, Sweden

Introduction

This Operator's manual describes the operation and maintenance of Scania industrial engines.

The engines are direct-injection, liquid-cooled, four-stroke diesel engines with turbochargers.

The engines are available with different output and engine speed settings. Engine power for the engine ordered is indicated on a plate located on the engine control unit.

Note:

Only standard components are described in the operator's manual. Information about special equipment is contained in instructions from the various manufacturers.

To ensure the maximum performance and the longest service life for the engine, remember the following:

- Read through the Operator's manual before starting to use the engine. Even regular users of Scania engines will get new information from the Operator's manual.
- Always follow the maintenance instructions.
- Read the section on safety carefully.
- Get to know your engine so that you know what it can do and how it works.
- Always contact an authorised Scania workshop for maintenance and repairs.

The information in this manual was correct at the time of going to press. Scania reserves the right to make alterations without prior notice.

Note:

Always use Scania spare parts for maintenance and repair.

Certification

IMPORTANT!

For Scania to guarantee that the engine corresponds to its certified configuration, and take responsibility for any damage and injuries that occur, maintenance must be carried out in accordance with the instructions in this Operator's manual.

An emissions certified engine fulfils the emissions requirements for a particular range of application.

On each emissions certified engine there is a label which shows which requirements the engine fulfils. Scania guarantees that each such engine fulfils the emissions requirements for the range of application for which it is certified.

The following are required for the certified engine to fulfil the emissions requirements once it has been taken into service:

- Maintenance is to be carried out in accordance with the instructions in this Operator's manual.
- Maintenance and repairs of injection equipment are to be carried out by an authorised Scania workshop.
- The engine may only be modified with equipment that has been approved by Scania.
- Seals may be broken and setting data edited only once approval has been granted by Scania. Modifications may be made by authorised personnel only.
- Modifications affecting the exhaust and intake systems must be approved by Scania.

Otherwise, the instructions in the Operator's manual for the running and maintenance of the engine shall apply. Follow the safety precautions on the following pages.

© Scania CV AB 2025, Sweden

Power classes

Scania supplies engines in 5 different power classes:

ICFN, Continuous Service: Intended for continuous operation and an unlimited number of operating hours per year at a total load factor of 100% provided that the engine speed is at a minimum of 85% of the nominal value of the engine. If the engine speed is below 85% of the nominal value, the rated power is available for 1 hour in a 6-hour period and the average load must not exceed 80% of the power at the current rotational speed.

IFN, Intermittent Service: Intended for periodic use, where the rated power is available for one hour per six-hour period. The total load factor must not exceed 80 % of the rated power. Unlimited number of operational hours per year.

PRP, Prime Power: Intended for continual use and an unlimited number of operational hours with varying loads. For continuous operation and unlimited annual operating time with varying loads. Max. average load factor of 70% of rated power during 24 hours of operation. 1 hour/12 hour period over 100% load. Max. 25 hours accumulated service time over 100% load per year. This power class applies to single-speed engines.

COP, Continuous Power: Intended for continual use with a non-varying load and an unlimited number of operational hours.

ESP, Emergency Standby Power: Intended for use with varying loads for a maximum of 200 hours per year. Cannot be overloaded. The average load factor must not exceed 70% of the rated power in a 24-hour period. ESP engines are intended as back-up power supplies in the efficient electrical networks in Europe, North and South America, Australia, New Zealand, Japan and Taiwan. In other areas, PRP is recommended for back-up power supply.

The engine serial numbers and power classes for the engines that are used in this installation should be listed below: You can find the power class of your engine in the engine type data sheet on the Scania website, www.scania.com.

Engine serial number: _____

Motor type: _____

Engine power: _____ kW at _____ rpm

☐ **ICFN, Continuous service**

☐ **IFN, Intermittent service**

☐ **PRP, Prime power**

☐ **COP, Continuous Power**

☐ **ESP, Maximum stand-by power**

© Scania CV AB 2025, Sweden

Environment and safety

Environmental liability

Scania develops and produces engines that are as environmentally-friendly as possible. Scania has made major investments in the reduction of harmful exhaust emissions in order to fulfil the environmental requirements in force in almost every market.

At the same time, we have been able to maintain a high level of performance quality and operating economy for Scania engines. To maintain these throughout the entire service life of the engine, it is important for the user to follow the instructions on driving, maintenance and fuel, lubricating oil and coolant as outlined in the Operator's manual.

Other green initiatives taken include ensuring that, following maintenance and repair, waste that is harmful to the environment (for example oil, fuel, coolant, filters and batteries) is disposed of accordance with the applicable environmental requirements.

Information on parts with particularly hazardous substances

Note:

A number of component parts on the engine contain materials with particularly hazardous substances.

The substances have properties that can have a serious and lasting effect on human health and the environment.

If a part or component parts contain more than 0.1% by weight of a substance listed on the REACH candidate list, the supplier must provide information about the substance.

The requirement is defined in Article 33 of the REACH Regulation (EC 2006/1907) and applies within the EU, Liechtenstein, Norway and Iceland.

https://echa.europa.eu/candidate-list-table.

A list of engine parts containing substances in the candidate list is provided by Scania.

https://sure.scania.com/reach.

According to Article 9 of the EU Waste Framework Directive ((EU) 2018/851), manufacturers of parts containing more than 0.1% by weight of a particular hazardous substance must communicate this to the EU Chemicals Agency (ECHA).

Scania supplies individual notification numbers in SCIP for affected vehicles.

https://sure.scania.com/

The notification number can be used to search the ECHA SCIP database.

https://echa.europa.eu/scip-database

Safety

The following pages contain a summary of the safety precautions to be complied with when operating and maintaining Scania engines. The equivalent text can also be found under the relevant maintenance item.

To prevent damage to the engine and to ensure that it runs optimally, follow the instructions in the warnings and advisories.

If the instructions are not followed, the warranty can cease to apply.

© Scania CV AB 2025, Sweden

Different types of advisory

Warning!

All advisories preceded by Warning! are very important. They warn of serious faults and incorrect operation that could lead to personal injury. Example:

WARNING!

Block the starting device when working on the engine. If the engine starts unexpectedly, there is a serious risk of injury.

Important!

Advisories preceded by Important! warn of faults and incorrect operation that could lead to equipment being damaged. Example:

IMPORTANT!

An excessive coolant temperature can cause engine damage.

Please note:

Advisories preceded by Note: refer to information important to ensure the best possible operation and functionality. Example:

Note:

Leave the engine off for at least 7 minutes before you check the oil level.

© Scania CV AB 2025, Sweden

Environment

This Operator's manual contains specially highlighted text with instructions to help protect the environment during maintenance. Example:

Environment

Use a suitable container. The fuel collected must be disposed of as specified in national and international laws and regulations.

Warnings and advisories

Smoking

WARNING!

Smoking is prohibited

- in the vicinity of flammable or explosive material, e.g. fuel, oils, batteries, chemicals
- when refuelling and in the vicinity of the filling station
- when working on the fuel system

Safety precautions for driving

Daily maintenance

Always carry out a visual inspection of the engine and engine compartment before starting the engine or when the engine has been switched off after operation.

This inspection should be done to detect fuel, oil or coolant leaks, or anything else that may require corrective action.

Fuel

WARNING!

The wrong fuel grade can cause breakdowns or stoppages by causing the injection system to malfunction. This can cause damage to the engine and, possibly, personal injury.

REQUIREMENT!

Use only fuel which fulfils the requirements in the Quality requirements for fuel section.

Refuelling

WARNING!

During refuelling there is a risk of fire and explosion. The engine must be switched off and smoking is prohibited.

Never overfill the tank as the fuel needs space to expand. Make sure that the filler cap is fully closed.

Hazardous gases

WARNING!

Only start the engine in a well-ventilated area. The exhaust gases contain carbon monoxide and nitrogen oxides, which are toxic.

When the engine is run in an enclosed space, there must be an effective device to extract exhaust gases and crankcase gases.

© Scania CV AB 2025, Sweden

Starter lock

IMPORTANT!

If the instrument panel is not fitted with a starter lock, the engine compartment should be locked to prevent unauthorised personnel from starting the engine. Alternatively, a lockable master switch or battery master switch can be used.

Starter gas

WARNING!

Never use starter gas or similar agents to help start the engine. This can cause an explosion in the intake manifold and possible injury.

Driving

WARNING!

The engine must not be run in environments where there is a risk of explosion, as all of the electrical or mechanical components can generate sparks.

Approaching a running engine always poses a safety risk. Parts of the body, clothes or dropped tools can get caught in rotating parts such as the fan and cause injury. For personal safety all rotating parts and hot surfaces must be fitted with guards.

Safety precautions for handling materials

Fuel and lubricating oil

WARNING!

All fuels and lubricants as well as many chemicals are flammable. Always follow the instructions on the relevant packaging.

The work must be carried out on a cold engine. Fuel leaks and spillages on hot surfaces can cause fire.

Store used rags and other flammable materials safely so as to avoid spontaneous combustion.

Batteries

WARNING!

The batteries contain and form oxyhydrogen gas, particularly during charging. Oxyhydrogen gas is flammable and highly explosive.

There must be no smoking, naked flames or sparks near the batteries or the battery compartment. Incorrect connection of a battery cable or jump lead can cause a spark, which can cause the battery to explode.

© Scania CV AB 2025, Sweden

Chemicals

WARNING!

Most chemicals such as glycol, anti-corrosive agents, preservative oils and degreasing agents, are hazardous to health. Some chemicals, such as preservative oil, are also flammable. Always follow the safety precautions on the packaging.

Store chemicals and other materials which are hazardous to health in approved and clearly marked containers, where they are inaccessible to unauthorised persons.

Environment

Excess and used chemicals must be disposed of as specified in national and international laws and regulations.

Safety precautions for maintenance

Switch off the engine

WARNING!

Working on a running engine always poses a safety risk. Parts of the body, clothes or dropped tools can get caught in rotating parts and cause injury.

Always switch off the engine before carrying out maintenance, unless otherwise indicated.

Make it impossible to start the engine: Remove any starter key, or cut the power using the main power switch or battery master switch and lock them.

Fix a warning plate somewhere appropriate, showing that work is being carried out on the engine.

Hot surfaces and fluids

WARNING!

There is always a risk of sustaining burns when an engine is hot. Particularly hot parts are branch pipes, turbochargers, oil sumps, and hot coolant and oil in pipes and hoses.

© Scania CV AB 2025, Sweden

Lubrication system

WARNING!

Hot oil can cause burns and skin irritation. Wear protective gloves and eye protection when changing hot oil.

Make sure that there is no pressure in the lubrication system before starting work on it.

Make sure that the oil filler cover is fitted when starting and driving in order to avoid oil escaping.

Environment

Used oil must be disposed of as specified in national and international laws and regulations.

Cooling system

WARNING!

Never open the coolant filler cap when the engine is hot. Hot coolant and steam may spray out and cause burns. If the cover has to be opened do it slowly to release the pressure before removing the cover. Wear protective gloves as the coolant is still very hot.

Avoid skin contact with coolant as this may cause irritation to the skin. Wear eye protection and gloves when handling coolant.

Ethylene glycol can be fatal if ingested.

Environment

Used coolant must be disposed of as specified in national and international laws and regulations.

Fuel system

WARNING!

Maintenance and repairs of injection equipment are to be carried out by an authorised Scania workshop.

Always use Scania spare parts for the fuel and electrical systems. Scania spare parts are designed to minimise the risk of fire and explosion.

Environment

Use a suitable container. The fuel collected must be disposed of as specified in national and international laws and regulations.

Electrical system

WARNING!

Switch off the engine and switch off the power by disconnecting the electrical cables to the battery. External power supplies to extra equipment in the engine must also be disconnected.

Always use Scania spare parts for the fuel and electrical systems. Scania spare parts are designed to minimise the risk of fire and explosion.

© Scania CV AB 2025, Sweden

Electric welding

WARNING!

When carrying out welding work on and near the engine, disconnect the battery and alternator leads. Pull out the multi-pin connector for the engine control unit as well.

Connect the welding clamp close to the component to be welded. The welding clamp must not be connected to the engine, or so that the current can cross a bearing.

When welding is finished:

1. Connect the alternator and engine control unit cables.
2. Connect the batteries.

Batteries

WARNING!

The batteries contain highly corrosive sulphuric acid. Take care to protect your eyes, skin and clothes when charging or handling batteries. Wear protective gloves and eye protection.

If sulphuric acid comes into contact with your skin: Wash it off with soap and plenty of water. If it splashes in your eyes: Rinse immediately with plenty of water and seek medical attention.

Environment

Used batteries must be disposed of as specified in national and international laws and regulations.

Before starting

WARNING!

Ensure that all guards are in place before starting the engine. Ensure that no tools or other objects have been left on the engine.

The air filter must be fitted before starting the engine. Otherwise there is a risk of objects being sucked into the compressor impeller or of injury if you come into contact with the air filter.

Cybersecurity

IMPORTANT!

The machine manufacturer is responsible for ensuring that all engine management communication is protected against all forms of cyber attack.

The machine manufacturer is also responsible for ensuring the engine can be operated safely in all conditions, including the option of shutting off the engine in the event of disruption to communications with or without engine control.

© Scania CV AB 2025, Sweden

Engine data plate

The engine data plate indicates, in the form of a code, the engine type, its size and applications. It also indicates the engine type power range and the nominal engine speed. The engine's EU type approval for exhaust emissions is indicated under *Output*, where applicable.

The engine power is stated on a plate which is located on the engine control unit. The engine serial number is stamped onto the top of the cylinder block at the front right.

Example: DC09 074A

DC	Turbocharged diesel engine with air-cooled charge air cooler.
09	Displacement in whole dm^3.
074	Performance and certification code. The code indicates, together with the application code, the normal gross engine output.
A	Code for application. A means for general industrial use.

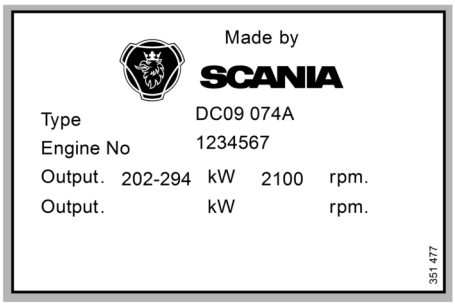

Example of an engine data plate

© Scania CV AB 2025, Sweden

Component identification

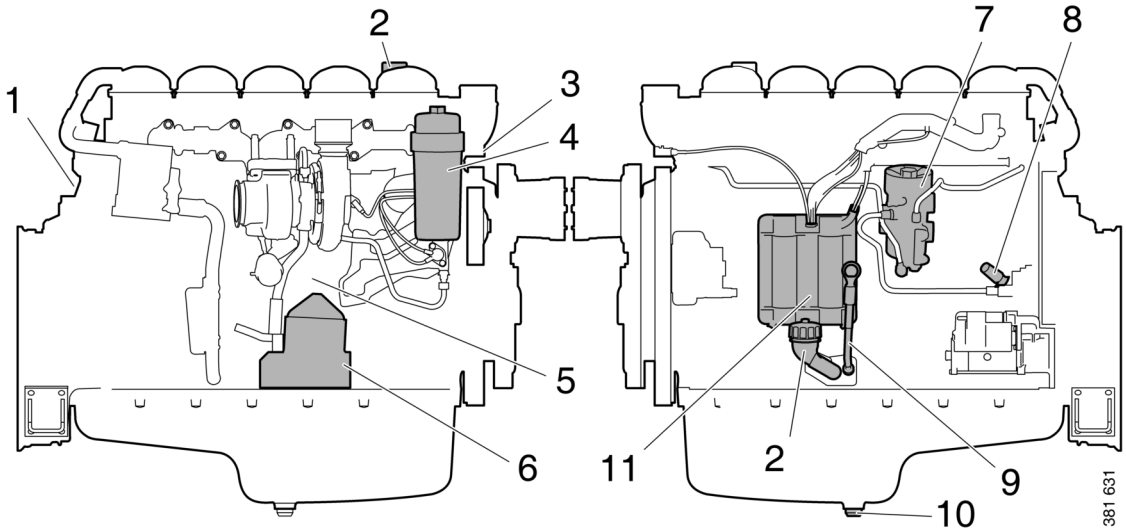

The illustration shows a normal version of a DC09 engine. The engine ordered may have different equipment.

1. *Engine data plate.*
2. *Oil filler.*
3. *Engine serial number, stamped into the cylinder block.*
4. *Oil filter.*
5. *Nipple for draining and filling coolant.*
6. *Centrifugal oil cleaner.*
7. *Fuel filter.*
8. *Hand pump for fuel.*
9. *Oil dipstick.*
10. *Oil plug.*
11. *Engine control unit.*

Please note: The water separating prefilter for the fuel is located between the fuel tank and engine.

© Scania CV AB 2025, Sweden

Starting and running

Checks before first start

Before the engine is started for the first time, carry out the maintenance items listed under First start in the maintenance schedule. Check the following (also see Maintenance intervals):

- Oil level.
- Coolant.
- Fuel level.
- Fluid level in batteries.
- Battery state of charge.
- Condition of the drive belt.

Checks before driving

Carry out daily maintenance as described in the maintenance schedule prior to operation. See Maintenance intervals.

Starting the engine

WARNING!

Never use starter gas or similar agents to help start the engine. This can cause an explosion in the intake manifold and possible injury.

Only start the engine in a well ventilated area. When the engine is run in an enclosed space, there must be effective devices to extract exhaust gases and crankcase gases.

IMPORTANT!

The starter motor must only be cranked twice for 30 seconds at a time. After that, it must rest for at least 5 minutes before the next attempt to start it.

For environmental reasons the Scania engine has been developed to be started with a low fuel feed. Using unnecessarily large amounts of fuel when starting the engine always results in emissions of unburnt fuel.

1. Open any fuel cock.
2. Disengage the engine.
3. If the engine has a battery master switch: Connect the power using the battery master switch.
4. Start the motor.

If the fuel tank has been run dry or if the engine has not been used for a long time, bleed the fuel system. See the section Venting the fuel system.

Starting at low temperatures and at high altitudes

Take the local environmental requirements into account. Use a fuel heater and engine heater to avoid starting problems and white smoke.

Scania recommends that an engine heater should be used if the engine will be used at temperatures below -10°C (14°F) or at an altitude of more than 2,000 metres.

A low engine speed and a moderate load on a cold engine limits white smoke, gives better combustion and warms up the engine more quickly than warming it up with no load.

Avoid running it longer than necessary at idling speed.

© Scania CV AB 2025, Sweden

Driving

Check instruments and warning lamps at regular intervals.

Engine speed range

The engine operating speed range is between low idling and the nominal engine speed. The nominal engine speed is indicated on the engine data plate. Low idling can be set between 500 and 975 rpm.

A slightly higher engine speed than the nominal engine speed may occur at low or negative load.

Limp home operation

If there is a fault in the normal throttle opening or if CAN communication is interrupted, the following emergency operation option is provided:

A CAN fault or throttle opening fault in an all-speed engine (both signal and idling switch):

- The throttle opening value is 0% and the engine is running at normal idling speed.
- The throttle opening value is 0% and the engine is running at fixed raised idling speed (750 rpm) if this function is activated.

CAN fault:

- The engine is switched off if the shutdown function is activated.

Driving at high altitude

When driving at high altitudes engine power is reduced automatically due to the lower oxygen content in the air. It is then not possible to run the engine at maximum power.

Note:

Driving at an altitude higher than 4,000 metres above sea level is only permitted if it has first been approved by Scania.

Coolant temperature

IMPORTANT!

An excessive coolant temperature can cause engine damage.

Normal coolant temperature during operation is 90 to 95°C (194 to 203°F).

The alarm levels are set in the engine control unit. The default setting for the lowest and highest limit values for high coolant temperature are 95°C/203°F and 105°C/221°F respectively.

The following function is standard as alarm for high coolant temperature:

- Alarm and torque reduction at the lowest limit value.

© Scania CV AB 2025, Sweden

Depending on the engine configuration, the following alarm functions may also be available:

- Alarm only.
- Alarm and engine shutdown at the highest limit value.
- Alarm, torque reduction at the lowest limit value and engine shutdown at the highest limit value.
- Alarm and engine shutdown at the highest limit value with the possibility of engine shutdown override control.
- Alarm, torque reduction at the lowest limit value and engine shutdown at the highest limit value, with the possibility of engine shutdown override control.

If driven for extended periods under an extremely light load, the engine may have difficulty in maintaining the coolant temperature. At an increased load the coolant temperature rises to the normal value.

Oil pressure

Normal oil pressure during operation is 3-6 bar (43.5-87 psi). The lowest permitted oil pressure when idling is 0.7 bar (10.2 psi).

The engine management system issues an alarm at the following levels:

- At an engine speed below 1,000 rpm and an oil pressure below 0.7 bar (10.2 psi).
- At an engine speed above 1,000 rpm and an oil pressure below 2.5 bar (36.3 psi) for longer than 3 seconds.

The incorrect oil pressure alarm has the following functions:

- Alarm only.
- Alarm and torque reduction by 30%.
- Alarm and engine shutdown.
- Alarm and engine shutdown override control.

Note:

High oil pressure (above 6 bar/87 psi) is normal if the engine is cold when started.

Charging indicator lamp

If the lamp comes on during operation: Check and adjust the alternator drive belt according to the instructions in the section Checking the drive belt.

If the charging indicator lamp is still on, this could be due to an alternator fault or a fault in the electrical system.

Belt transmission

When the belt transmission is new, it may make a squeaking noise when driving. This noise is normal and disappears after 50-100 hours of operation. The noise does not affect the service life of the belt transmission.

© Scania CV AB 2025, Sweden

Engine shutdown

IMPORTANT!

There is risk of post boiling and of damage to the turbocharger if the engine is switched off without cooling. The power must not be switched off before the engine has stopped.

Note:

The battery voltage must remain on for a few seconds after the 15 voltage is switched off so that the control units can store the values and switch to standby mode.

10 prohibited engine shutdowns will cause a torque reduction (70% of fuel volume). Reset the engine by switching it off correctly once.

1. Run the engine without a load for a few minutes if it has been run continuously with a heavy load.
2. Switch off the engine.

Checks after driving

WARNING!

Block the starting device when working on the engine. If the engine starts unexpectedly, there is a serious risk of injury.

There is always a risk of sustaining burns when an engine is hot. Particularly hot parts are branch pipes, turbochargers, oil sumps, and hot coolant and oil in pipes and hoses.

IMPORTANT!

Check the coolant level following the first start. Top up with coolant as necessary.

1. Check that the power supply has been cut.
2. Top up the fuel tank. Make sure that the filler cap and the area round the filler opening are clean to avoid contamination of the fuel.
3. If there is a risk of freezing, the cooling system must contain enough glycol. See the section Risk of freezing.
4. If the temperature is below 0°C (32°F): Prepare for the next start by connecting the engine heater, if fitted.

© Scania CV AB 2025, Sweden

Maintenance

The maintenance programme covers a number of points that are divided into the following sections:

- Lubrication system.
- Air cleaner.
- Cooling system.
- Fuel system.
- Miscellaneous.

WARNING!

Block the starting device when working on the engine. If the engine starts unexpectedly, there is a serious risk of injury.

There is always a risk of sustaining burns when an engine is hot. Particularly hot parts are branch pipes, turbochargers, oil sumps, and hot coolant and oil in pipes and hoses.

The maintenance programme includes the following:

- Maintenance S: Minimum basic maintenance.
- Maintenance M: More extensive maintenance.
- Maintenance L: Almost all maintenance items.
- Maintenance XL: All maintenance items

During a period, the sequence is S-M-S-L-S-M-S-L-S-M-S-XL.

IMPORTANT!

On delivery a Scania engine is optimised for its application. However, regular maintenance is necessary to

- prevent unplanned stops
- extend the service life of the engine
- maximise the long-term emission performance of the engine
- give the best possible operating economy.

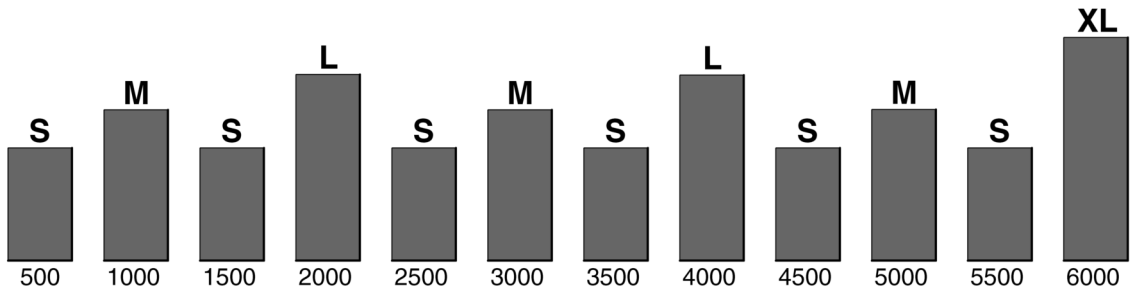

© Scania CV AB 2025, Sweden

Cleaning the engine

WARNING!

Beware of hot washing water. Wear eye protection, protective clothes and protective gloves.

Environment

Dispose of the washing water in compliance with relevant national or local regulations.

The engine and engine compartment are cleaned using hot water. Use high-pressure jets with caution. Avoid spraying electrical components such as the starter motor, alternator, etc.

Engines with few hours of operation

IMPORTANT!

On engines with few hours of operation, maintenance must be carried out annually or every 5 years.

Stand-by generator sets and similar items that are not used regularly should be test run and checked in accordance with the manufacturer's instructions.

The following maintenance items must be carried out once the engine has been warmed up to operating temperature.

1. Checking the oil level.
2. Checking the coolant level.
3. Checking the vacuum indicator.
4. Checking the fuel level.
5. Checking for engine leakage.

© Scania CV AB 2025, Sweden

Maintenance intervals

	Daily	First time at		Interval (hours)				Minimum	
		first start	500	500	1,000	2,000	6,000	annu-ally	every 5 years
			R	S	M	L	XL		
Lubrication system									
Checking the oil level	*X*	*X*							
Changing the oil			*X*	*X*	*X*	*X*	*X*	*X*	
Cleaning the centrifugal oil cleaner			*X*	*X*	*X*	*X*	*X*	*X*	
Renewing the oil filter			*X*	*X*	*X*	*X*	*X*	*X*	
Air cleaner									
Reading the vacuum indicator	*X*		*X*	*X*	*X*	*X*	*X*		
Renewing the filter element						*X*	*X*		*X*
Renewing the safety cartridge						*X*	*X*		*X*
Cooling system									
Checking the coolant level	*X*	*X*	*X*	*X*	*X*	*X*	*X*		
Checking the coolant's anti-freeze and corrosion protection		*X*				*X*	*X*	*X*	
Changing the coolant and clean-ing the cooling system							*X*		*X*
Fuel system									
Checking the fuel level	*X*	*X*							
Renewing the fuel filters					*X*	*X*	*X*		*X*
Fuel tank venting filter						*X*		*(X)*[1]	
Other									
Checking the drive belt		*X*			*X*	*X*	*X*	*X*	
Checking for leakage	*X*		*X*	*X*	*X*	*X*	*X*		
Checking and adjusting the valve clearance and unit injec-tors			*X*			*X*	*X*		

1. Applies every other year.

© Scania CV AB 2025, Sweden

Lubrication system

Oil grade

Scania LDF stands for the Scania Long Drain Field test standard. Scania LDF oils have been carefully selected after extensive testing. The approval is only granted to the highest grade engine oils available on the market.

Recommended engine oil
Scania Oil LDF-3
Scania Oil LDF-2
Scania Oil LDF
Scania Oil E7

The engine oil must satisfy the following quality requirements:

- ACEA E5/API CI-4.
- ACEA E7/API CI-4 +.
- For engines not run on low-sulphur fuel, the TBN (Total Base Number) should be at least 12 (ASTM D2896).
- Oils with a low ash content (ACEA E9/API CJ4) are not recommended.

Check with your oil supplier that the oil satisfies these requirements.

If the engine is used in areas of the world where engine oil with ACEA or API classification is not available, the oil grade must be measured in actual operation. In this case contact the nearest Scania workshop.

In case of very low surface temperatures: Consult your nearest Scania workshop on how to avoid starting difficulties.

Viscosity class	Outdoor temperature in °C		
SAE 20W-30	-15°C	-	+30°C
SAE 30	-10°C	-	+30°C
SAE 40	-5°C	-	+45°C
SAE 5W-30	< -40°C	-	+30°C
SAE 10W-30	-25°C	-	+30°C
SAE 15W-40	-20°C	-	+45°C

Viscosity class	Outdoor temperature in °F		
SAE 20W-30	5°F	-	86°F
SAE 30	14°F	-	86°F
SAE 40	23°F	-	113°F
SAE 5W-30	< -40°F	-	86°F
SAE 10W-30	-13°F	-	86°F
SAE 15W-40	-4°F	-	113°F

© Scania CV AB 2025, Sweden

Labels for filled engine oil grade

When changing the oil it is important to use the correct engine oil grade. The oil filler should therefore be clearly marked with a label for the filled oil grade. However, there are only labels for oils with Scania LDF approval and oil grade ACEA E7.

Stick on a new label if the oil type or oil grade is changed in favour of any of the oil types above. Replace the label if it is missing.

Filling label in the cylinder block.

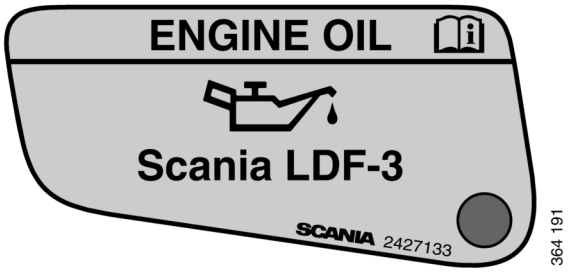

Filling label in the rocker cover.

If the oil grades below are used, you can order oil filler labels from Scania.

Oil grade	Colour	Part no.	Part no.
		Filling in the cylinder block	Filling in the rocker cover
Scania LDF-3	Red	2 132 426	2 427 133
Scania LDF-2	Blue	2 132 424	-
Scania LDF	Grey	2 269 345	-
ACEA E7	White	2 132 425	2 427 132

© Scania CV AB 2025, Sweden

Oil analysis

To be able to extend the oil change intervals using an oil analysis, Scania LDF-3 and LDF-2 oils must be used.

The following requirements must remain satisfied when the oil is changed:

- Viscosity at 100°C (212°F): max. ± 20% of the original value of the fresh oil.
- TBN (in accordance with ASTM D4739): > 3.5.
- TBN (in accordance with ASTM D4739): > TAN (in accordance with ASTM D664).
- Soot (DIN 51452): < 3%.

Such analysis measures the oil's total base number, TBN (Total Base Number), total acidic number, TAN (Total Acid Number), fuel dilution, water content, viscosity and the quantity of particles and soot in the oil.

The result of a series of analyses is used as the basis for establishing a suitable oil change interval.

If the conditions are changed, a new oil analysis programme must be carried out to establish new oil change intervals. Work out the new oil change interval for the engine in conjunction with the workshop.

REQUIREMENT!

Only Scania LDF oils may be used in conjunction with oil analysis and a possible extended oil change interval.

Depending on the market, the warranty conditions may also change if the oil change intervals differ from the recommended Scania timetable.

© Scania CV AB 2025, Sweden

Checking the oil level

REQUIREMENT!

Leave the engine off for at least 7 minutes before you check the oil level.

If the oil level exceeds the maximum level, the oil must be changed. Check the cause if the oil level exceeds the maximum level and contact your nearest Scania workshop if you suspect a fault.

IMPORTANT!

The oil dipstick is supplied with a protective rubber sleeve that may be damaged in the event of a malfunction. Pull out the oil dipstick by holding the ring designated for this purpose and let the rubber sleeve follow with it without effect.

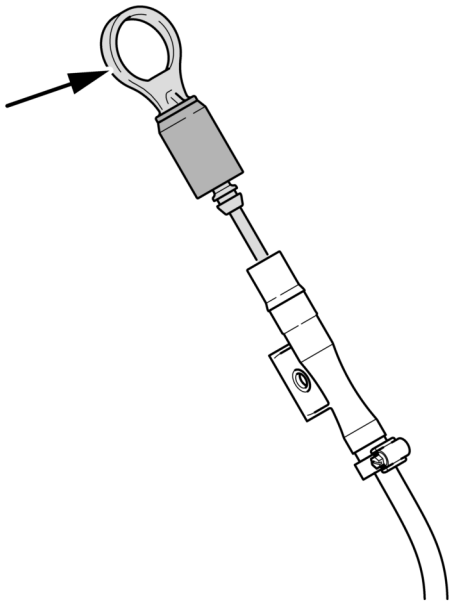

1. Pull out the oil dipstick (1) and check the oil level. The correct level is between the minimum and maximum marks on the oil dipstick.
2. Fill with more oil at point 2 in the illustration when the oil level is at or below the lower mark.

   You can find more information on the correct oil grade under the heading Oil grade.

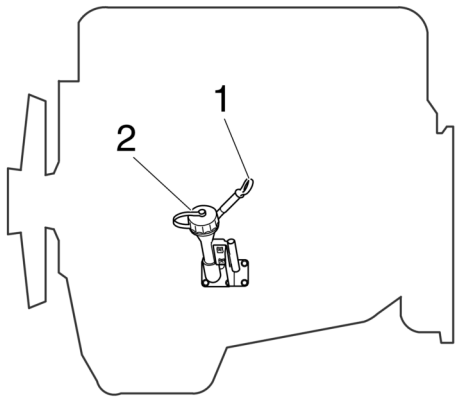

1. *Oil dipstick*
2. *Oil filler*

© Scania CV AB 2025, Sweden

Note:

Some engines are fitted with a protection plug which prevents dust from entering the lubrication system. Make sure that the plug and O-ring are fitted before the oil filler cap.

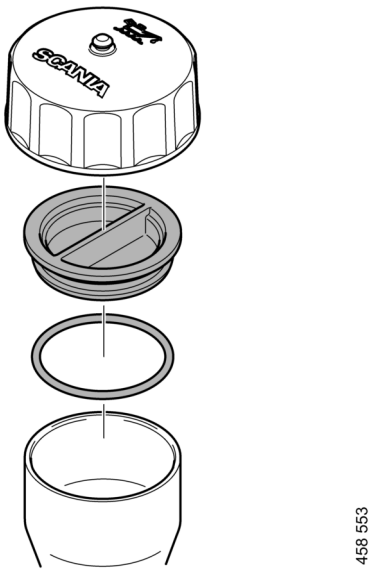

Protection plug with O-ring

Maximum angles of inclination during operation

Maximum permissible angles of inclination during operation vary, depending on the type of oil sump. See illustration.

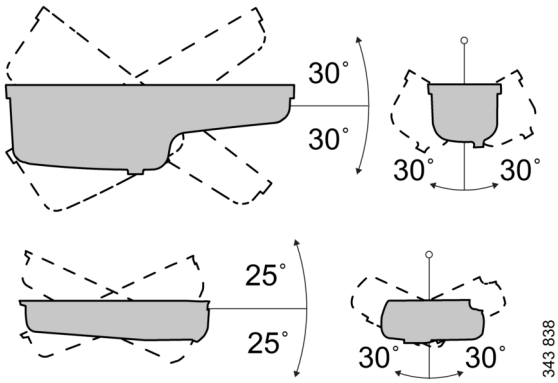

© Scania CV AB 2025, Sweden

Changing the oil

WARNING!

Hot oil can cause burns and skin irritation. Use protective gloves and eye protection when renewing hot oil. Make sure that there is no pressure in the lubrication system before changing the oil. The oil filler cover must always be in place when starting and running the engine to prevent oil being ejected.

Note:

Change oil more often if the engine is subjected to particularly demanding operation, such as a dusty environment, or if deposits in the centrifugal oil cleaner are thicker than 28 mm (1.1 in).

Renew the oil filter and clean the centrifugal oil cleaner when changing the oil.

Environment

Use a suitable container. Used oil must be disposed of as specified in national and international laws and regulations.

1. Unscrew the oil plug and drain the oil when the engine is hot. In certain engines, the oil is pumped out using a bilge pump. When draining via the valve, the oil should be hot. Alternatively, use a pump. This is so that draining occurs more quickly.
2. Clean the magnet on the oil plug.
3. Refit the oil plug.
4. Fill with oil.
5. Check the level on the oil dipstick.

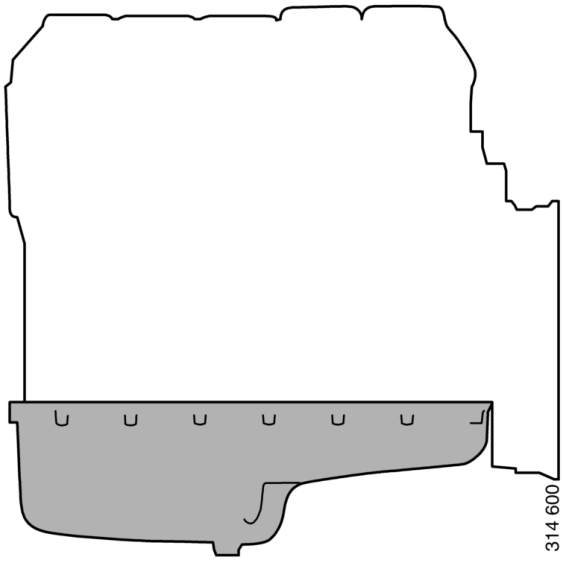

Oil volume for oil sump with deep front:

Min. 31 litres (8.2 US gallons).

Max. 36 litres (9.5 US gallons).

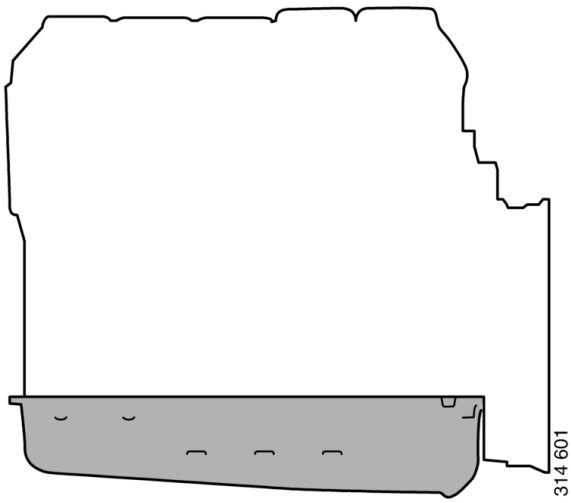

Oil capacity for low oil sump:

Min. 28 litres (7.4 US gallons).

Max. 35 litres (9.2 US gallons).

© Scania CV AB 2025, Sweden

Cleaning the centrifugal oil cleaner

WARNING!

The oil may be hot. Carefully remove the cover from the centrifugal oil cleaner.

Wear eye protection and protective gloves when working on the centrifugal oil cleaner.

When the centrifugal oil cleaner is cleaned, there should be some dirt deposits on the paper in the rotor cover. If the paper is clean, the equipment is not working as it should. If this is the case, investigate the cause of this.

Renew the paper more frequently if the dirt deposits are thicker than 28 mm (1.1 inches) during a scheduled oil change.

1. Clean the cover.
2. Unscrew the nut securing the outer cover.
3. Let the oil run out from the rotor.
4. Lift out the rotor. Wipe off the outside.
5. Loosen the rotor nut and unscrew it about 1.5 turns.

Note:

Take care not to damage the rotor shaft.

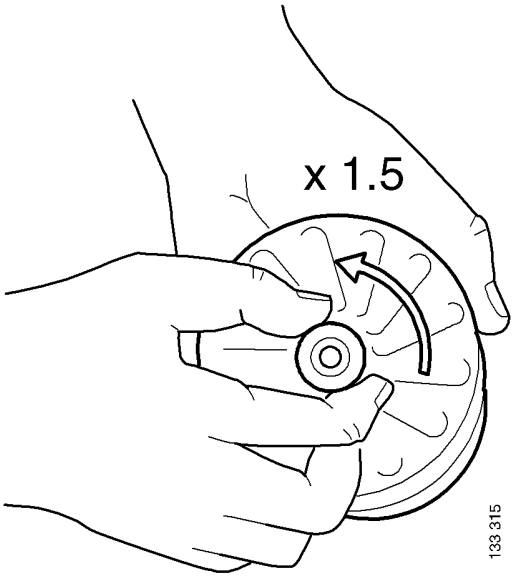

© Scania CV AB 2025, Sweden

6. If the rotor nut is too tight: Turn the rotor upside down and secure the rotor nut in a vice. See illustration.
7. Use protective jaws so as not to damage the grooves of the rotor nut.
8. Turn the rotor 1.5 turns anti-clockwise by hand.
9. If this does not work: Screw 2 nuts together with an M20 screw.
10. Position the screw head at the bottom of the rotor.
11. Position a ring spanner on the lower nut and turn the rotor 1.5 turns anti-clockwise.

IMPORTANT!

Do not attach the rotor directly to the vice. Never strike the rotor cover.

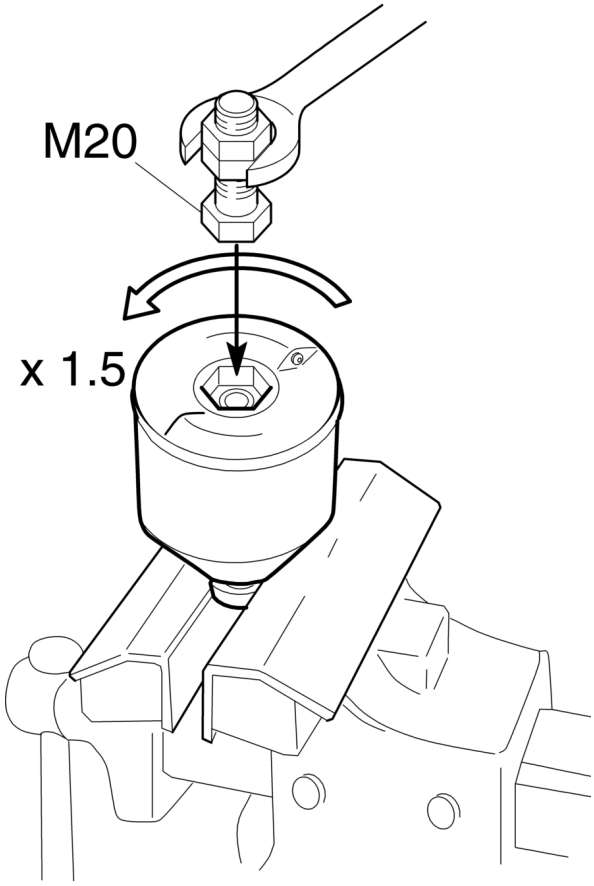

12. Remove the rotor cover by holding the rotor in both hands and tapping the rotor nut against the table. Never strike the rotor directly as this may damage its bearings.
13. Remove the strainer from the rotor cover. If the strainer is stuck, insert a screwdriver between the rotor cover and strainer and carefully prise them apart.

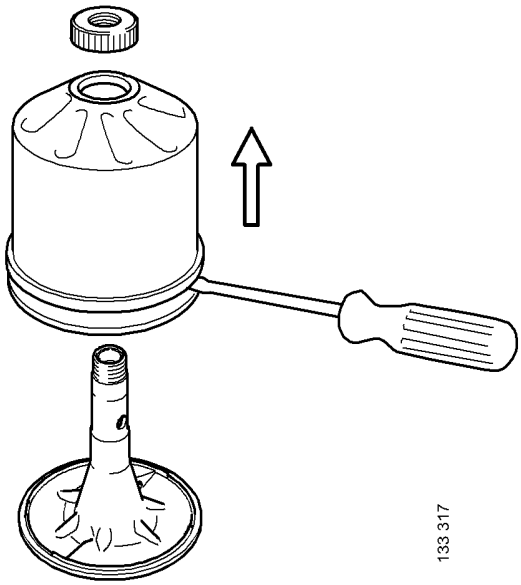

© Scania CV AB 2025, Sweden

14. Remove the paper insert.
15. Scrape off any remaining dirt deposits from the inside of the rotor cover. If the deposits on the paper are thicker than 28 mm (1.1 in), the centrifugal oil cleaner must be cleaned more often.

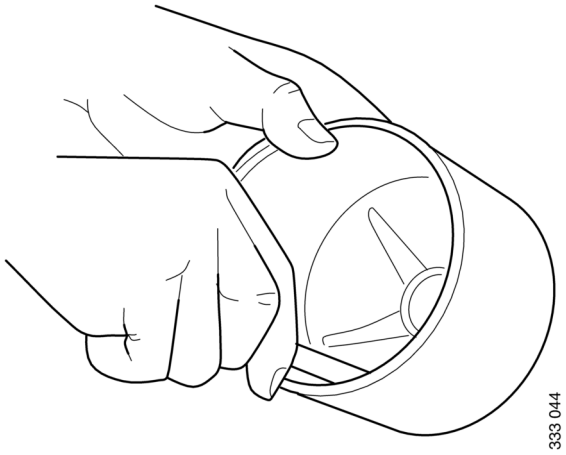

16. Wash the parts according to the applicable industrial method.
17. Check the 2 nozzles on the rotor. Ensure that they are not blocked or damaged.

    Renew any damaged nozzles.
18. Check that the bearings are undamaged.

    Renew damaged bearings.

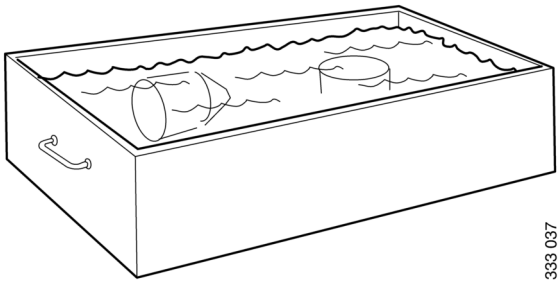

19. Fold and fit a new paper insert on the inside of the rotor cover as illustrated.

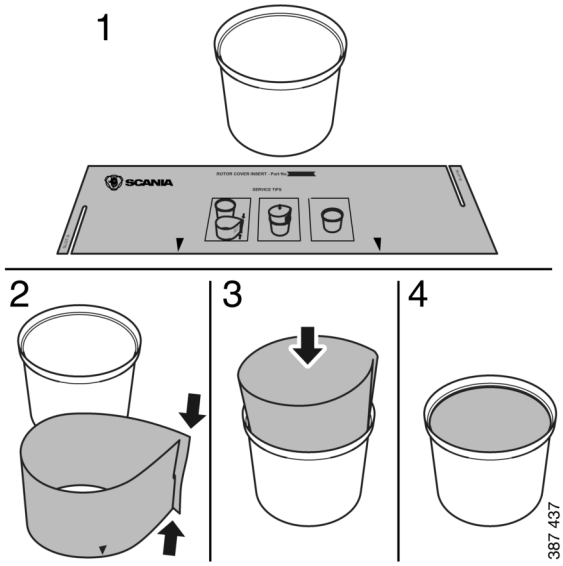

© Scania CV AB 2025, Sweden

20. Fit the strainer onto the rotor.
21. Fit a new O-ring to the foot of the centrifugal oil cleaner.
22. Refit the rotor cover. Ensure that the O-ring is not outside the edges, but is in the groove.
23. Screw the rotor nut back on by hand.
24. Check that the shaft is not damaged or loose.

    Contact a Scania workshop if the rotor shaft needs renewing.

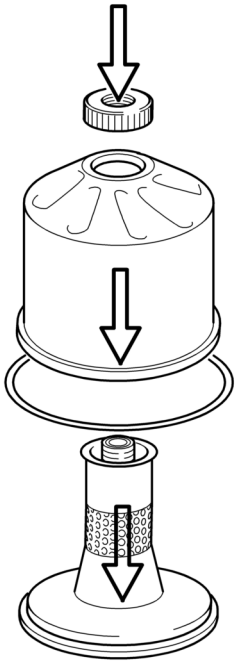

Note:

Take care not to damage the rotor shaft.

25. Refit the rotor and rotate it by hand to make sure it rotates easily.

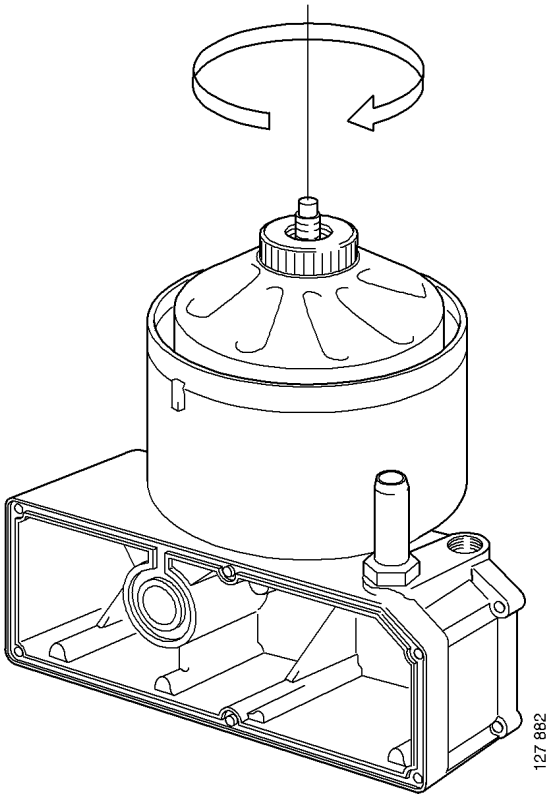

© Scania CV AB 2025, Sweden

26. Fit a new O-ring in the cover.
27. Refit the cover and tighten the lock nut. Tightening torque 20 Nm (15 lb-ft).

IMPORTANT!

To reduce the risk of oil leakage it is important to tighten the cover to the correct tightening torque.

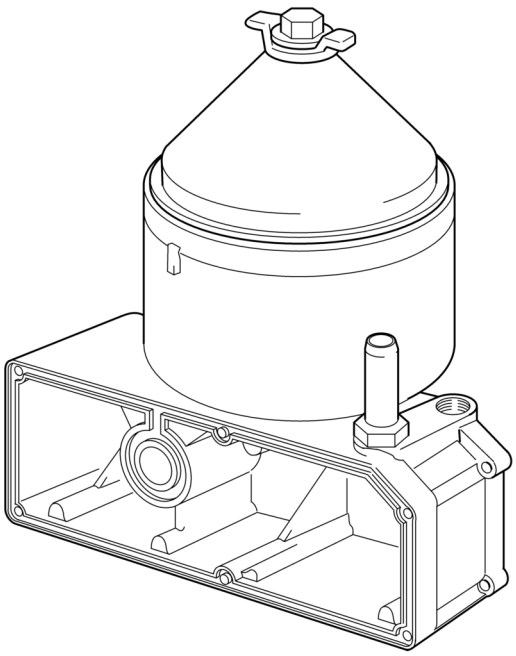

Operational testing of the centrifugal oil cleaner

Operational testing need only be carried out if it is suspected that the centrifugal oil cleaner is malfunctioning. For example, if the dirt deposit is abnormally small given the distance driven.

The rotor rotates very fast and should continue to turn when the engine has stopped.

1. Run the engine until it reaches normal operating temperature.
2. Turn off the engine and listen for the sound from the rotor. Use your hand to feel if the filter housing is vibrating.
3. If the filter housing is not vibrating, dismantle and check the centrifugal oil cleaner.

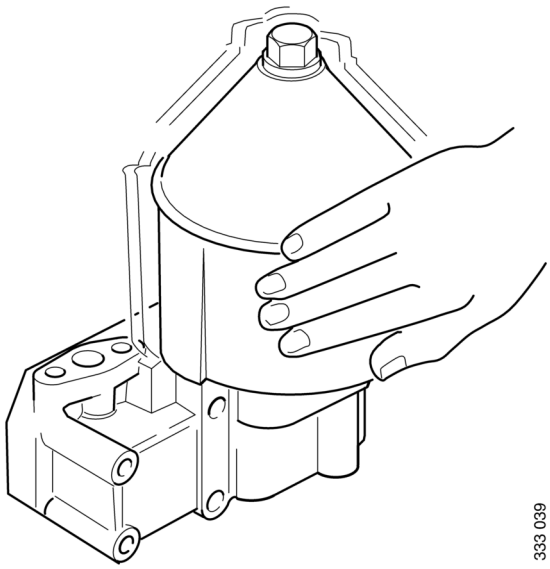

© Scania CV AB 2025, Sweden

Renewal - Rotor, 9 and 13 litre engines

Tool

Designation	Figure
Part No.: *588 475.*Hexagon socket, 1/2", 36 mm	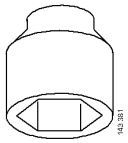

1. Run the engine until it reaches normal operating temperature.
   – **Drain the lubrication system as follows:**
2. Detach the oil filter cover with specified tool. See illustration.
3. Allow the system to drain for approximately 2 minutes.
4. Renew the oil filter.
5. Refit the oil filter cover. Tightening torque for the cover: 25 Nm.
6. Clean the area around the centrifugal oil cleaner.

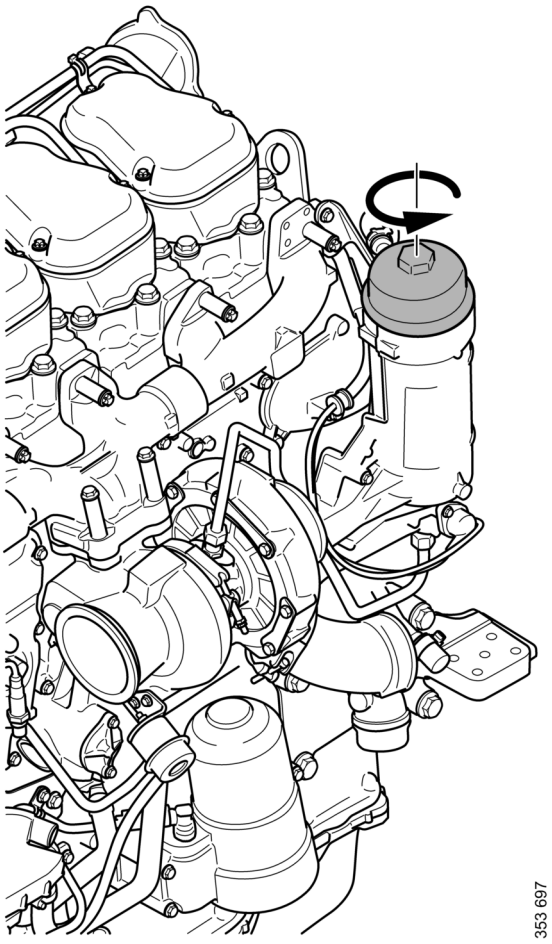

Environment

Use a waste oil trolley when draining the centrifugal oil cleaner.

WARNING!

Wear protective gloves and eye protection. When the bottom cover is detached, a small amount of oil will always run out.

7. Unscrew the bottom cover of the centrifugal oil cleaner 2 turns without removing the cover. See illustration. Start from a mark on the cover to see the number of turns.
8. Drain the centrifugal oil cleaner for approximately 2 minutes.

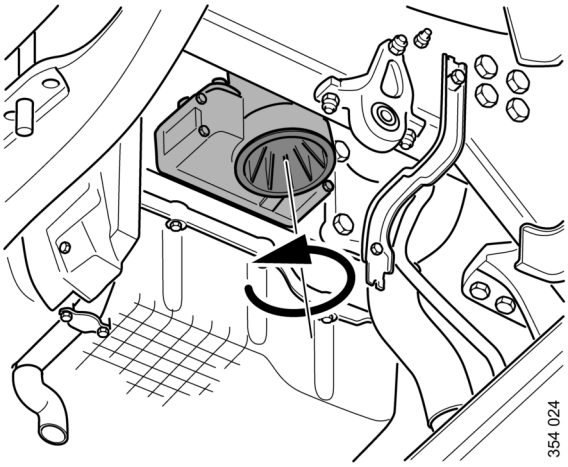

© Scania CV AB 2025, Sweden

9. Remove the bottom cover together with the rotor.

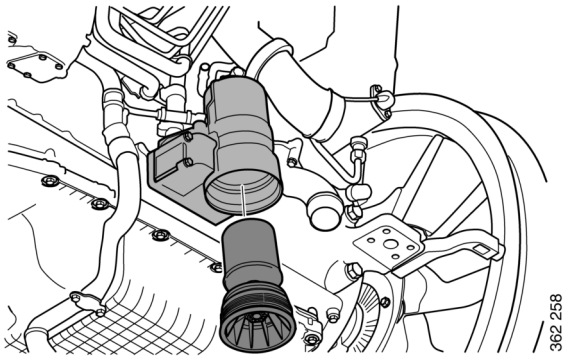

10. Remove the rotor by pulling it straight up from the cover. See illustration.

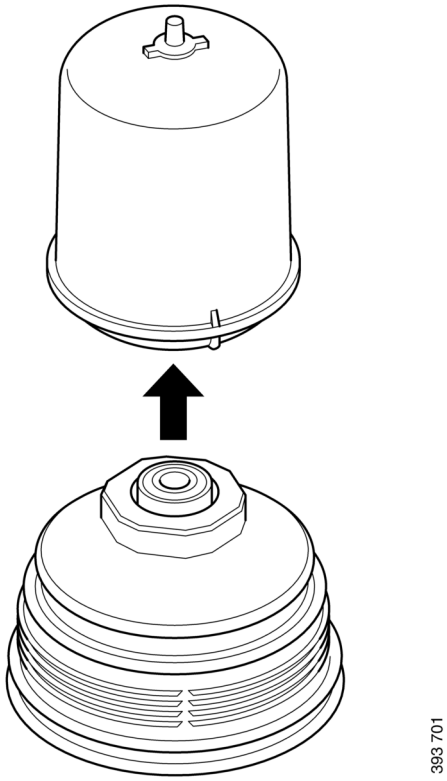

IMPORTANT!

Lubricate the threads on the cover and O-rings with engine oil before they are refitted.

11. Renew the uppermost black O-ring.
12. Renew the 2 lower green O-rings.

© Scania CV AB 2025, Sweden

13. Press the rotor onto the cover.

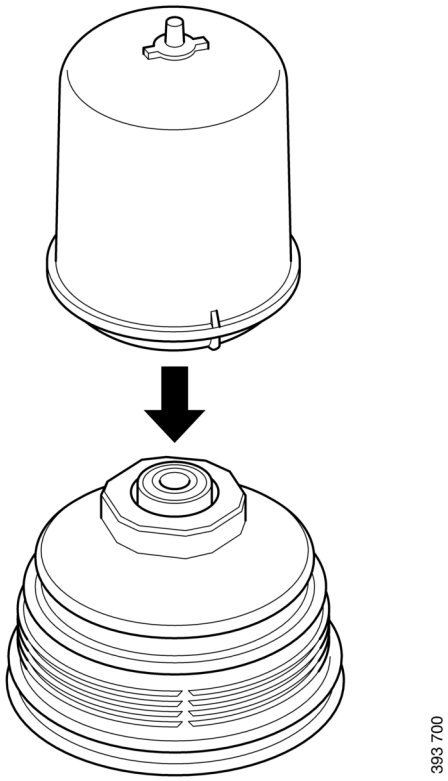

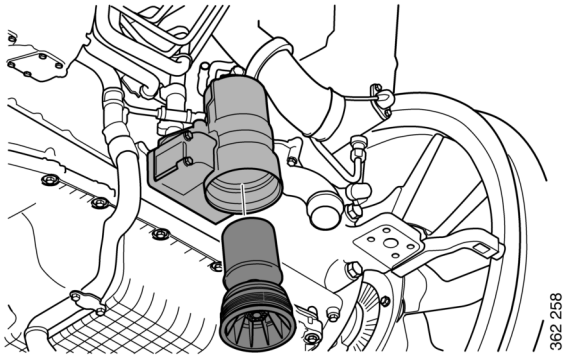

14. Refit the cover with rotor in the centrifugal oil cleaner. Tightening torque: 70 Nm.

© Scania CV AB 2025, Sweden

Renewing the oil filter

Tool

Designation	Figure
Hexagon socket, 1/2", 36 mm	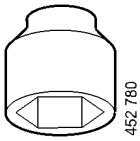 452 780

IMPORTANT!

Clean the centrifugal oil cleaner at the same time as you change the oil filter. Otherwise, the oil filter will become blocked and the resistance in the filter will increase. If this happens, an overflow valve in the filter retainer opens and lets the oil pass without being filtered.

1. Unscrew the filter cover using the socket.

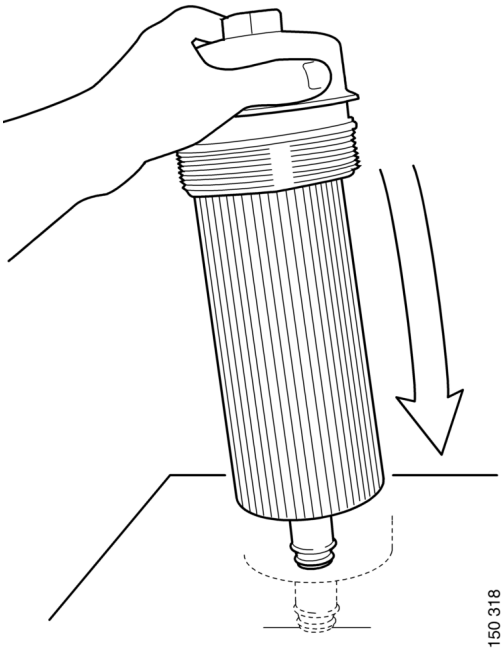

IMPORTANT!

Do not use an adjustable spanner or other open tool, as there is a risk of damaging the filter cover.

2. Lift out the filter housing cover with filter element. The filter housing will drain automatically once the filter has been removed.
3. Detach the old filter from the cover by holding the cover and carefully tapping the entire filter element against something hard. Remember that there will be oil splashes.
4. Fit the new filter and tighten the filter cover to 25 Nm (18 lb/ft).

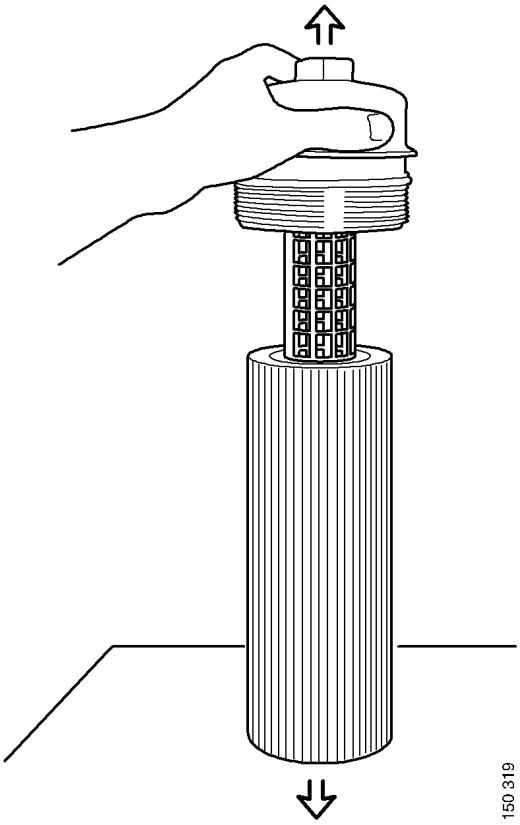

© Scania CV AB 2025, Sweden

Air cleaner

WARNING!

Never start the engine without the air filter in position. Without the air filter, there is a risk of dirt being sucked into the engine.

The engine turbocharger will continue to rotate and take in air for a time, even after the engine has stopped. Therefore, wait for a few minutes before opening the air cleaner.

IMPORTANT!

Renew the filter element before the maintenance interval if the vacuum indicator shows red or emits a signal.

The filter element must not be cleaned in water or be blown clean with compressed air. There is always a risk that the filter element will be damaged when it is cleaned.

Reading the vacuum indicator

Mechanical vacuum indicator

If the mechanical vacuum indicator's red plunger is fully visible, renew the air cleaner filter element in accordance with the following section.

Electric vacuum indicator

The engine may also be fitted with an electric vacuum indicator. It is connected to the machine interface and indicates with a warning lamp or another signal. See the next section for renewing the air cleaner filter element.

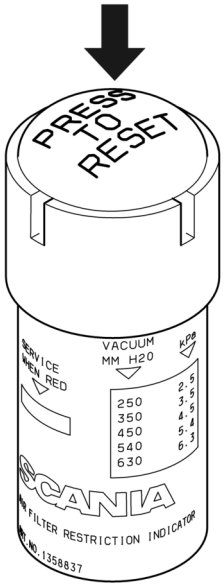

326 671

Mechanical vacuum indicator with reset button.

© Scania CV AB 2025, Sweden

Renewing the air cleaner filter element and safety cartridge

1. Remove the cover from the air cleaner.
2. Renew the filter element.
3. If the air cleaner has a safety cartridge: Remove the safety cartridge and fit a new one.
4. Insert a torch into the filter element and check that the filter paper is free of holes and cracks.
5. Renew the O-ring if it is damaged or hard.
6. Assemble the air cleaner.
7. Ensure that the O-ring is not outside the edges.
8. If the engine is fitted with a mechanical vacuum indicator, reset the vacuum indicator by pressing the button.
9. An electric vacuum indicator is reset automatically after renewing the filter.

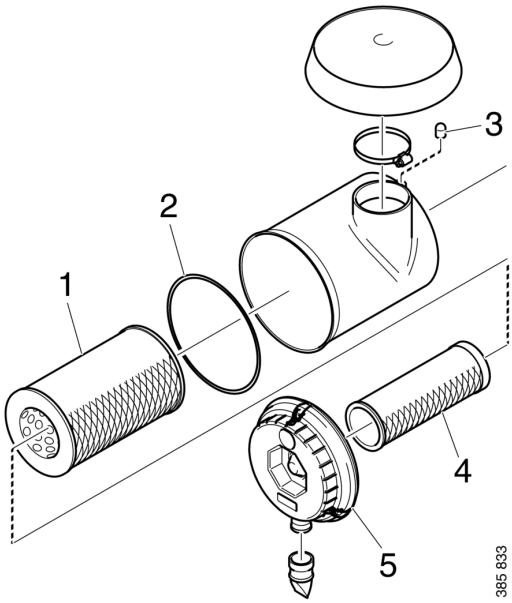

Air cleaner with safety cartridge:

1. *Filter element*
2. *O-ring*
3. *Vacuum indicator*
4. *Safety cartridge*
5. *Cover*

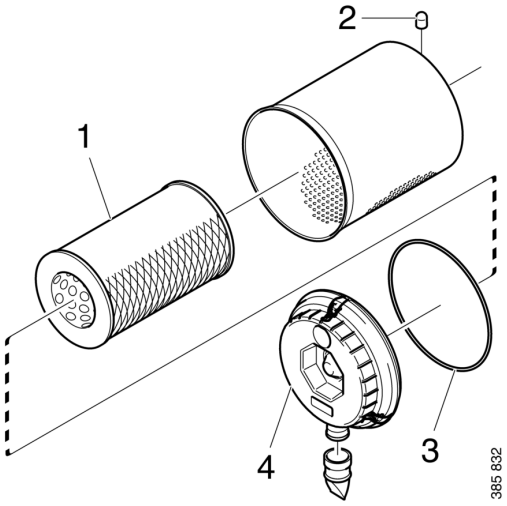

Air cleaner without safety cartridge:

1. *Filter element*
2. *Vacuum indicator*
3. *O-ring*
4. *Cover*

© Scania CV AB 2025, Sweden

Cooling system

Coolant

Only the product Scania coolant, or other products tested as antifreeze and corrosion protection for Scania, may be used in Scania engines.

Products that do not satisfy the requirements for use in a Scania engine may result in faults in and damage to the cooling system. This may lead to the invalidation of Scania's warranty for faults and damage caused by the use of unsuitable coolant.

Note:

The coolant should be changed when the cooling system is cleaned: every 6,000 hours or at least every five years. See Changing the coolant and cleaning the cooling system.

The coolant recommended by Scania is a mixture of water with antifreeze (ethylene glycol) and corrosion protection. The coolant has several properties which are important for the function of the cooling system:

- Corrosion protection.
- Antifreeze.
- Increases the boiling point.

Note:

Too high a dose of antifreeze and corrosion protection will increase the amount of sludge and blockages accumulating in the radiator. Too low a concentration can lead to corrosion of the cooling system and ice formation at low temperatures.

Hot climates

In order to retain the corrosion protection and the higher boiling point, it is essential to use coolant consisting of water mixed with antifreeze and corrosion protection (ethylene glycol). This also applies in countries where the temperature never drops below 0°C (32°C).

The coolant should always contain 35-55% antifreeze and corrosion protection by volume so that the coolant properties ensure that the coolant works correctly.

© Scania CV AB 2025, Sweden

Antifreeze and corrosion protection

The antifreeze and corrosion protection used in Scania engines should be of the antifreeze (ethylene glycol) and corrosion protection type.

Scania Ready Mix coolant is a pre-mixed coolant consisting of water, antifreeze (ethylene glycol) and corrosion protection.

Water

Use only pure fresh water that is free from particles, sludge and other impurities. If there is uncertainty about the quality of the water, Scania recommends use of Scania ready-mixed coolants. See the section Recommended Scania products.

Recommended Scania products

Scania Ready Mix 50/50

Scania Ready Mix 50/50 is a ready-mixed coolant containing 50% antifreeze (ethylene glycol) and corrosion protection and 50% water. It should be used in cold countries where there is a risk of freezing in the cooling system.

Part no.	Volume litres	Volume US gallons
1 921 955	5	1.3
1 921 956	20	5.3
1 921 957	210	55
1 896 695	1,000	264

Scania concentrate

Scania also produces coolant with antifreeze and corrosion protection in the form of a concentrate.

Part no.	Volume litres	Volume US gallons
1 894 323	5	1.3
1 894 324	20	5.3
1 894 325	210	55
1 894 326	1,000	264

© Scania CV AB 2025, Sweden

Topping up

Coolant must only be topped up with pre-mixed coolant. The pre-mixed coolant can either be concentrate mixed with clean freshwater or pre-mixed coolant from the factory. Use only pure fresh water that is free from particles, sludge and other impurities.

IMPORTANT!

Containers used for mixing coolant must be intended for the purpose and free from any dirt or contaminants. When the containers not in use they must be kept closed to avoid collecting dirt and dust.

Note:

Within the coolant change interval, coolant may only be reused if it has been cleaned of dirt, sludge and particles. If the coolant is contaminated with oil or fuel, it must not be reused.

© Scania CV AB 2025, Sweden

Addition of antifreeze and corrosion protection to water

The coolant should contain 35-55% by volume antifreeze (ethylene glycol) and corrosion protection. The percentage varies depending on the need for antifreeze.

A minimum of 35% by volume of Scania antifreeze and corrosion protection is needed to provide sufficient corrosion protection.

Measure the ethylene glycol content (antifreeze and corrosion protection) with a refractometer following the instructions in the Checking the coolant's antifreeze and corrosion protection section.

Risk of freezing

IMPORTANT!

The engine should not be subjected to heavy loads when ice starts to build up in the cooling system.

As the coolant starts to freeze, the water in the coolant starts to crystallise and the percentage of ethylene glycol in the coolant therefore rises. If freezing produces a great increase in the amount of ice, circulation problems could arise. There is no risk of damage by freezing if the content of Scania antifreeze and corrosion protection, or an equivalent mixture of a similar product, is at least 35% by volume.

Minimal ice formation in the coolant sometimes causes disruptions without any risk of damage. For example, the auxiliary heater may not work for up to 1 hour after the engine has been started.

© Scania CV AB 2025, Sweden

Antifreeze and corrosion protection concentration table, litres

Freezing point (°C)	-21	-24	-30	-38	-50	Cooling system volume (litres)
Ethylene glycol (vol. %)	35	40	45	50	60	
Ethylene glycol (litres)	11	12	14	15	18	30
	14	16	18	20	24	40
	18	20	23	25	30	50
	21	24	27	30	36	60
	25	28	32	35	42	70
	28	32	36	40	48	80
	32	36	41	45	54	90
	35	40	45	50	60	100
	39	44	50	55	66	110
	42	48	54	60	72	120
	46	52	59	65	78	130
	49	56	63	70	84	140
	53	60	68	75	90	150
	56	64	72	80	96	160
	60	68	77	85	102	170
	63	72	81	90	108	180
	67	76	86	95	114	190
	70	80	90	100	120	200

© Scania CV AB 2025, Sweden

Antifreeze and corrosion protection concentration table, US gallons

Freezing point (°F)	-6	-11	-22	-36	-58	Cooling system volume (US gallons)
Volume of ethylene glycol (%)	**35**	**40**	**45**	**50**	**60**	
Volume of ethylene glycol (US gallons)	2.9	3.2	3.7	4	4.8	7.9
	3.7	4.2	4.8	5.3	6.3	10.6
	4.8	5.3	6.1	6.6	7.9	13.2
	5.5	6.3	7.1	7.9	9.5	15.9
	6.6	7.4	8.5	9.2	11.1	18.5
	7.4	8.5	9.5	10.6	12.7	21.1
	8.5	9.5	10.8	11.9	14.3	23.8
	9.2	10.6	11.9	13.2	15.9	26.4
	10.3	11.6	13.2	14.5	17.4	29.1
	11.1	12.7	14.3	15.9	19	31.7
	12.2	13.7	15.6	17.2	20.6	34.3
	12.9	14.8	16.6	18.5	22.2	37
	14	15.9	18	19.8	23.8	39.6
	14.8	16.9	19	21.1	25.4	42.3
	15.9	18	20.3	22.5	26.9	44.9
	16.6	19	21.4	23.8	28.5	47.6
	17.7	20.1	22.7	25.1	30.1	50.2
	18.5	21.1	23.8	26.4	31.7	52.8

© Scania CV AB 2025, Sweden

Checking the coolant level

WARNING!

Do not open the coolant filler cover in the expansion tank if the engine is hot. Hot coolant and steam may spray out and cause burns.

If the cover has to be opened do it slowly to release the pressure before removing the cover. Wear protective gloves as the coolant is still very hot.

IMPORTANT!

It is not permissible to top up large amounts of coolant via the expansion tank. Filling via the expansion tank leads to air locks in the cooling system which can lead to e.g. cavitation damage to the coolant pump shaft seal. If a large amount of coolant needs to be added, follow the instructions in the section Filling coolant.

Only pour pre-mixed coolant into the cooling system.

The following instructions apply to Scania expansion tanks. For other types of expansion tanks, follow the manufacturer's instructions.

1. Open the expansion tank cover and check the coolant level.
   - The right coolant level on a cold engine is at the height of the lower edge of the filler neck.
   - The right coolant level on a hot engine is approximately 25 mm (1 in) over the lower edge of the filler neck.
2. Top up with coolant as necessary.

© Scania CV AB 2025, Sweden

Checking the coolant's antifreeze and corrosion protection

Tool

Designation	Figure
Refractometer	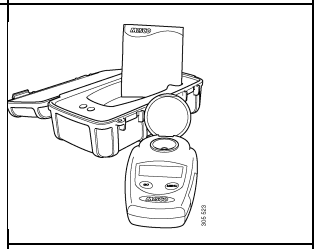
	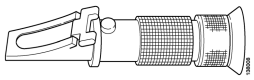

IMPORTANT!

Use only pure fresh water that is free from particles, sludge and other impurities.

1. Pour a small amount of coolant into a container and check that the coolant is pure and clear.
2. Change the coolant if it is contaminated or cloudy.
3. Measure the antifreeze content with a refractometer.

The following rules apply to ethylene glycol-based coolant:

- The antifreeze and corrosion protection content must be a minimum of 35 per cent by volume for corrosion protection to be sufficient.
- An antifreeze and corrosion protection content greater than 55 per cent by volume impairs the ability to protect from frost.
- If ice forms in the coolant, there are disruptions initially, but there is no immediate risk of damage. The engine should not be subjected to heavy loads when ice starts to form.

© Scania CV AB 2025, Sweden

Changing the coolant and cleaning the cooling system

Draining coolant

WARNING!

Do not open the coolant filler cover in the expansion tank if the engine is hot. Hot coolant and steam may spray out and cause burns. If the cover has to be opened do it slowly to release the pressure before removing the cover.

Use protective gloves as coolant can cause irritation if it comes in contact with the skin. Hot coolant can also cause scalding.

Environment

Use a suitable container. Used coolant must be disposed of as specified in national and international laws and regulations.

Draining coolant with coolant pump

Special tools

Number, designation	Figure
2 443 679, coolant pump	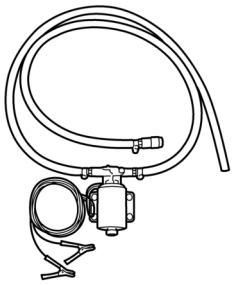 360 625

1. Open the expansion tank cover.
2. Place the hose from the coolant pump in an empty container.
3. Connect the pump to the draining nipple in the cylinder block. See illustration.

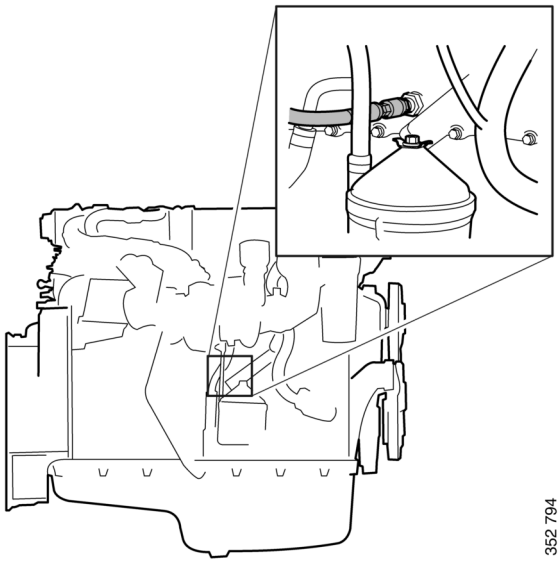
352 794

4. Connect the pump’s 2 cable terminals to the battery’s negative and positive terminal. Make sure that the drainage starts. If draining does not start: Change the position of the cable terminals.
5. Repeat the procedure at the cooling system's lowest drainage point. The location of the lowest drainage point on the engine may differ depending on engine application.

© Scania CV AB 2025, Sweden

Draining coolant with coolant trolley

Tool

Designation	Figure
588 540 Coolant trolley	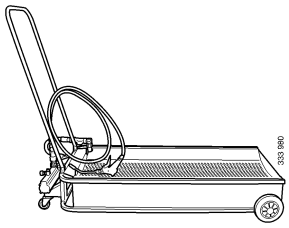
99 301 Adapter	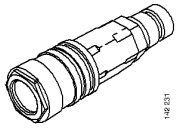

1. Open the expansion tank cover.
2. Position the hose from the coolant trolley in an empty container.
3. Connect the trolley to the draining nipple in the cylinder block. See illustration. An adapter must be used when using a trolley.
4. Drain the coolant.
5. Repeat the procedure at the cooling system's lowest drainage point. The location of the lowest drainage point on the engine may differ depending on engine application.

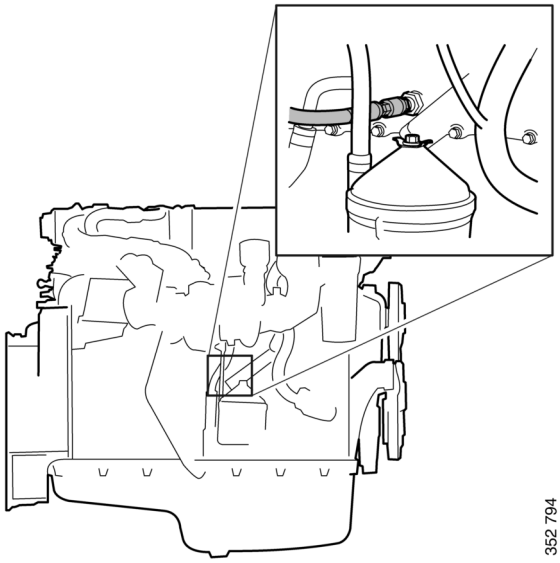

© Scania CV AB 2025, Sweden

Cleaning the cooling system

Note:

Clean the cooling system more often than specified in the maintenance interval if necessary.

External: Cleaning the radiator and charge air cooler

IMPORTANT!

Do not use caustic soda or other alkaline detergent as this could damage the aluminium.

Read the warning text on the detergent packaging.

1. Check that the radiator and the charge air cooler are not clogged on the air side and that the discs are not damaged.
2. Carefully scrape away any deposits from the radiator discs. Use a paraffin-based engine cleaner if necessary.
3. Carefully straighten bent discs using a steel brush or similar.

© Scania CV AB 2025, Sweden

Internal: Removing oil and grease

Environment

Use a suitable container. Used coolant must be disposed of as specified in national and international laws and regulations.

Always fit a new thermostat and a new cover to the expansion tank after cleaning, as the oil in the cooling system destroys the seals. If the engine is fitted with a coolant filter, also renew this filter.

It may be necessary to wash it multiple times if the cooling system is very dirty. One cause of contamination can be that oil is lying on top of the coolant and collecting high up in the cooling system. If several rinses are needed, this is not necessarily because work has been carried out incorrectly. Oil residues often need to be rinsed repeatedly from the expansion tank and the external heating system to be completely clean.

Repeated washing is more effective and preferable to using higher concentrations of detergent (max. 10%) or cleaning for a longer period (max 30 minutes).

If only a small amount of dirt has collected in the expansion tank after cleaning, one extra rinse and clean of the expansion tank only is usually sufficient. There is no need to clean the whole cooling system again.

1. Run the engine until it has reached operating temperature if possible and then drain the cooling system following the previous description.
2. Remove the thermostats.
3. Fill the cooling system with clean hot water mixed with detergent 2 479 017. Detergent 2 479 017 must make up 5-10% (depending on the degree of dirt) of the total coolant volume.

   If detergent 2 479 017 is not available, use a dishwashing detergent for domestic appliances that does not foam. Concentration 1%.
4. Warm up the engine for approximately 20-30 minutes. Remember to switch on the cab heating system, if one is installed.
5. Drain the cooling system.
6. Fill the cooling system with clean, hot water and run the engine for about 20-30 minutes.
7. Repeat steps 3-6 if the cooling system is not clean.
8. Drain the water from the cooling system.
9. If necessary, clean the expansion tank by detaching all hoses and rinsing and cleaning with a degreasing agent and a dish brush.

   Alternatively, dismantle the expansion tank and clean it with water with 10% of detergent 2 479 017. Fill the expansion tank with the mixture, shake it and drain it. Renew the cover of the expansion tank.
10. Refit the thermostats.
11. Fill the cooling system with new coolant as described in the next section.
12. Check again whether further dirt or oil has collected in the expansion tank. Decide whether it is necessary to carry out another full cleaning or whether only rinsing or cleaning of the expansion tank will suffice.

© Scania CV AB 2025, Sweden

Internal: Removing deposits

Environment

Use a suitable container. Used coolant must be disposed of as specified in national and international laws and regulations.

1. Run the engine until it has reached operating temperature and then drain the cooling system following the previous description.
2. Remove the thermostats.
3. Fill the cooling system with clean hot water mixed with a radiator detergent that is based on sulfamic acid and contains dispersing agents. Follow the manufacturer's instructions for the concentration and cleaning period.
4. Run the engine for the specified time. Remember to switch on the cab heating system, if one is installed.
5. Drain the cooling system.
6. Fill the cooling system with clean, hot water and run the engine for about 20-30 minutes.
7. Drain the water from the cooling system.
8. Refit the thermostats.
9. Fill the cooling system with new coolant as described in the next section.

© Scania CV AB 2025, Sweden

Filling coolant

These procedures apply when the cooling system has been drained and needs to be filled with a large amount of coolant.

WARNING!

Use protective gloves as coolant can cause irritation if it comes in contact with the skin. Hot coolant can also cause scalding.

IMPORTANT!

Mix the coolant as specified in the section headed Coolant.

Never fill a hot engine with a large amount of cold coolant. There is a high risk of cracks forming in the cylinder block and cylinder heads

Do not start the engine until the correct coolant level has been obtained. If the engine is started with engine coolant level low, it can damage the coolant pump shaft seal, which leads to coolant leakage.

© Scania CV AB 2025, Sweden

Filling coolant with coolant pump

Special tools

Number, designation	Figure
2 443 679, coolant pump	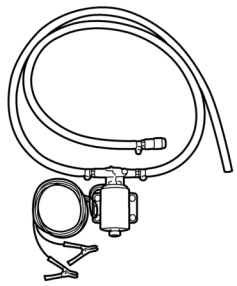 360 625

1. Open the expansion tank cover.
2. Connect the coolant pump to the filler nipple in the cylinder block. See illustration.
3. Connect the pump's 2 cable terminals to the battery's negative and positive terminal. Make sure that the filling starts. If the filling does not start: Change the position of the cable terminals.
4. Start the engine and run it at idling for 15 minutes.

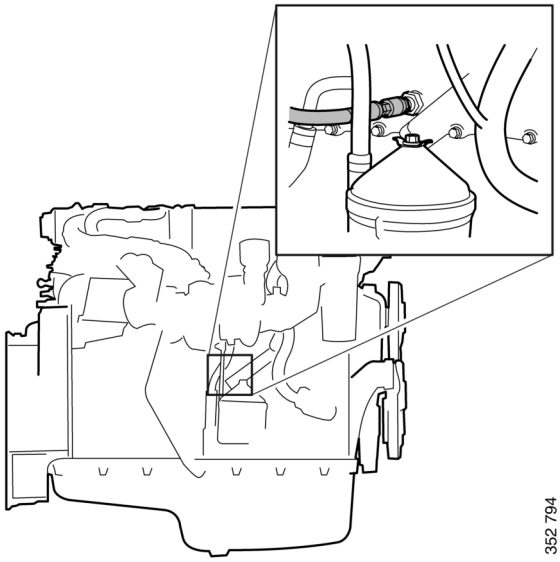

IMPORTANT!

It is very important that the engine is idling. Engine overspeed could damage the coolant pump shaft seal, which leads to coolant leakage.

5. Switch off the engine and fill with coolant to the maximum level through the expansion tank.

Air pockets may still be left in the cooling system. These will disappear after the engine has been operated for a period of time. Therefore, the coolant may need topping up at a later stage.

© Scania CV AB 2025, Sweden

Refilling coolant with coolant trolley

Tool

Designation	Figure
588 540 Coolant trolley	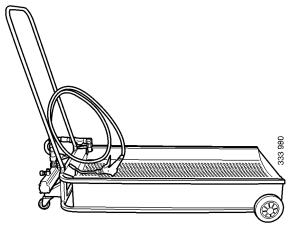
99 301 Adapter	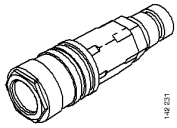

1. Open the expansion tank cover.
2. Connect the coolant trolley to the filler nipple in the cylinder block. See illustration. An adapter must be used when using a trolley.
3. Fill with coolant using coolant trolley to pump up to the maximum level of the expansion tank.
4. Disconnect the coolant trolley.
5. Start the engine and run it at idling for 15 minutes.

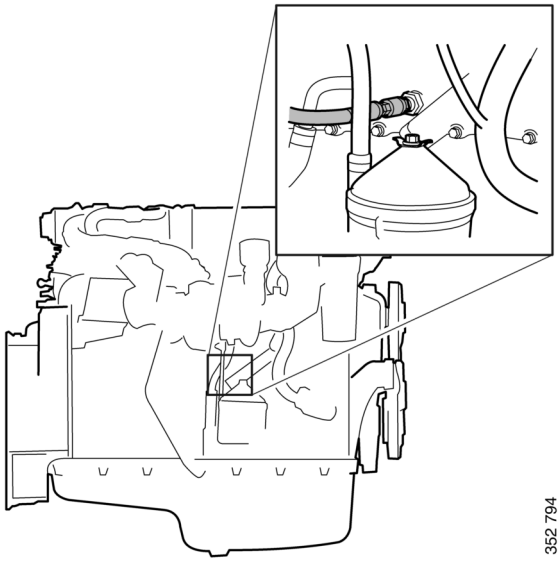

IMPORTANT!

It is very important that the engine is idling. Engine overspeed could damage the coolant pump shaft seal, which leads to coolant leakage.

6. Switch off the engine and fill with coolant to the maximum level through the expansion tank.

Air pockets may still be left in the cooling system. These will disappear after the engine has been operated for a period of time. Therefore, the coolant may need topping up at a later stage.

After filling, it may be good to start the engine and check that no coolant leakage occurs.

© Scania CV AB 2025, Sweden

Fuel system

Cleanliness requirements

IMPORTANT!

The whole fuel system is very sensitive to dirt and also very small particles. Foreign particles in the system can cause serious malfunctions. It is therefore very important that everything is as clean as possible when work is carried out on the fuel system. Before starting work on the fuel system, the engine must be washed. If possible, a hot wash should be used.

It is strictly forbidden to carry out any machining work or work with compressed air near an open fuel system.

Be extra careful and always use clean, lint-free and dust-free clothes and gloves when working on the fuel system. Scania recommends using Tegera 848 gloves.

Clean tools before they are used and do not use any worn or chrome-plated tools. Material and flakes of chrome may come off.

Clean connections and the surrounding area before removal. When cleaning, cloths or paper which shed fibres must not be used. Use clean and lint free cloths, part number 588 879.

Plug or cover the connections during removal. Also clean the connections before the components are fitted. Place removed components on a thoroughly cleaned, dust-free surface. Scania recommends using a stainless steel bench top, part number 2 403 296. Cover the components with a lint free cloth.

Checking the fuel level

Check the fuel level and fill with fuel as necessary.

Note:

If the fuel tank has been run dry or if the engine has not been used for a long time, bleed the fuel system. See the section Venting the fuel system.

© Scania CV AB 2025, Sweden

Renewing the water separating prefilter

Environment

Use a suitable container. The fuel collected must be disposed of as specified in national and international laws and regulations.

Before starting work: Close the stopcock on the fuel pipe and place a receptacle beneath the filter.

1. Open the drain tap on the filter cover and let the fluid run down into the container.
2. Unscrew the filter cover.
3. Unscrew the filter from the filter head.
4. Discard the old filter and use a new filter.
5. Lubricate the O-ring in the filter cover with engine oil.
6. Screw the filter cover onto the new filter by hand. Make sure that the drain tap is fully closed.
7. Lubricate the O-ring on the filter with engine oil.
8. Fill the width of the filter with clean fuel.
9. Screw the filter into position until the O-ring rests against the filter head. Tighten the filter another 1/2 to 3/4 turn by hand.
10. Open the shut-off cock and check the system for leaks.
11. Bleed the fuel system as per the following section.

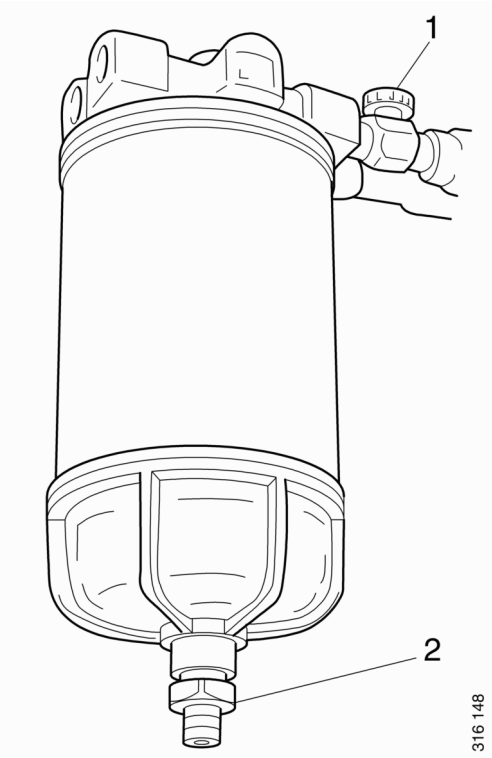

1. Shut-off cock

2. Drain tap

© Scania CV AB 2025, Sweden

Renewing the fuel filter

Tool

Designation	Figure
Hexagon socket, 1/2", 36 mm	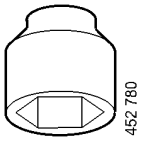

Environment

Use a suitable container. The fuel collected must be disposed of as specified in national and international laws and regulations.

Before starting work: Close the stopcock on the fuel pipe and place a receptacle beneath the filter.

1. Open the bleed nipple on the fuel filter housing to release any remaining pressure. It may be difficult to unscrew the filter cover if the system pressure has not fallen enough.
2. Unscrew the filter cover with the socket.

IMPORTANT!

Do not use an adjustable spanner or other open tool, as there is a risk of damaging the filter cover.

3. Lift the filter cover with filter element out of the fuel filter housing. The fuel filter housing will drain automatically (slowly) once the filter element has been removed.

IMPORTANT!

If draining is not working, the remaining fuel should be removed.

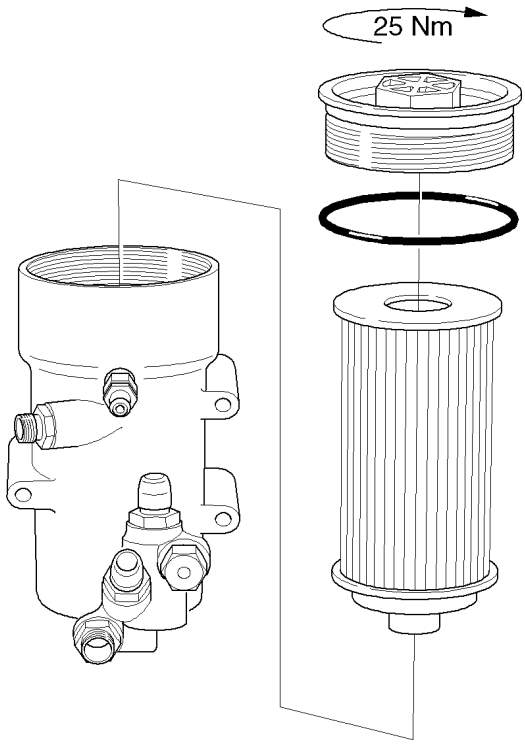

© Scania CV AB 2025, Sweden

4. Unscrew the overflow valve and blow the strainer in the filter housing clean. Also wipe the bottom of the filter housing.
5. Undo the old filter element from the cover by carefully bending it to one side.
6. Fit a new O-ring on the cover. Lubricate the O-ring with O-ring grease.
7. Press a new filter element into the snap fastener in the cover.

IMPORTANT!

Fit the filter element into the cover before placing it in the fuel filter housing or the filter element might be damaged.

8. Press down the filter element into the housing with the cover. Screw on the filter cover firmly with the socket. Tightening torque 25 Nm (18 lb-ft).

IMPORTANT!

Screw on the cover to the specified torque or the filter element may break. Do not use an adjustable spanner or other open tool, as there is a risk of damaging the filter cover.

9. Bleed the fuel system as per the following section.
10. Start the engine and check that there are no leaks.

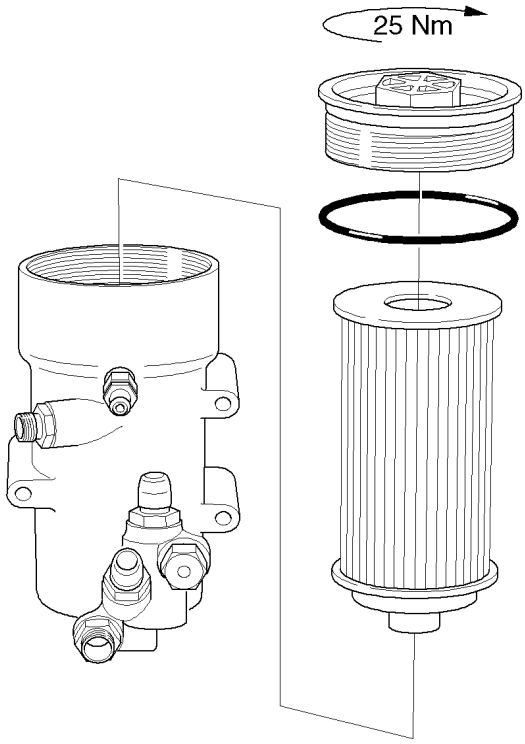

© Scania CV AB 2025, Sweden

Venting the fuel system

Venting the fuel system using a suction tool

Tool

Designation	Figure
Suction tool	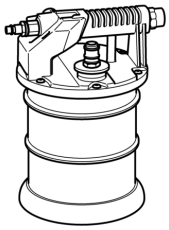 337 297

Note:

Scania recommends venting the fuel system using suction tools rather than with a hand pump. This is a quicker and simpler method, which ensures a complete venting.

Environment

Use a suitable container. The fuel collected must be disposed of as specified in national and international laws and regulations.

1. Connect a clear plastic hose to the bleed nipple on the fuel filter housing. Place the end of the plastic hose in a container that holds at least 3 litres (1 US gallon).

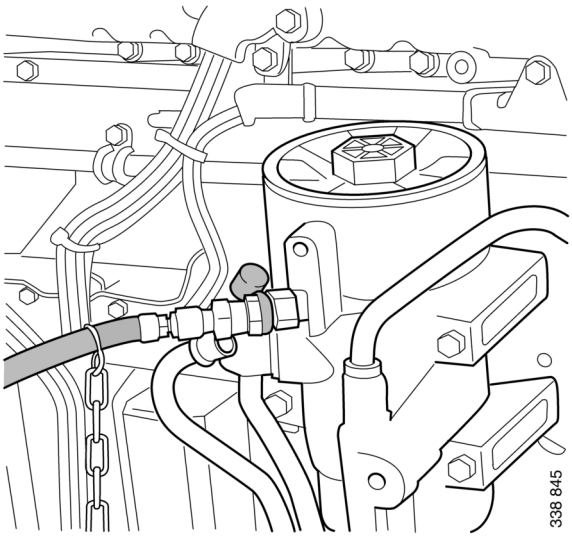

© Scania CV AB 2025, Sweden

2. Connect the suction tool.
3. Connect compressed air to the suction tool. Turn the rotary control to create a vacuum.

4. Open the bleed nipple. Hold the suction tool straight and draw out at least a full container of fuel.

   Once the fuel coming out of the hose is free of air bubbles, then venting is complete.
5. Close the bleed nipple. Remove the hose and suction tool.
6. Start the engine and check that there are no leaks.

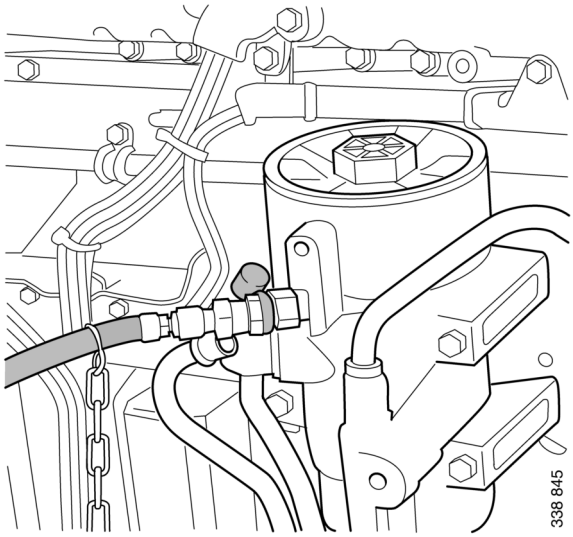

© Scania CV AB 2025, Sweden

Venting the fuel system using a hand pump

1. Attach a clear plastic hose to the bleed nipple on the fuel filter housing (1). Place the end of the plastic hose in a container that holds at least 3 litres (1 US gallon).
2. Open the bleed nipple and pump with the hand pump (3) until fuel comes out of the hose. If the fuel system is empty, it is necessary to pump approximately 100 strokes in order to draw up the fuel. Depending on the installation, a significantly greater number of pump strokes may be required before the fuel comes out.
3. Pump until fuel without air bubbles comes out, approximately 20 strokes.
4. Close the bleed nipple and remove the hose.
5. Transfer the hose to the fuel manifold bleed nipple (2).
6. Open the bleed nipple and pump using the hand pump (3) until fuel without air bubbles appears, approximately 50 pump strokes.
7. Close the bleed nipple and remove the hose.
8. Pump approximately 20 strokes with the hand pump until the overflow valve opens. A hissing sound should be heard.
9. Start the motor. The motor should be easy to start.
10. If the fuel filter has been renewed, check that no fuel is leaking from the filter. Further tighten the filter if it is leaking.

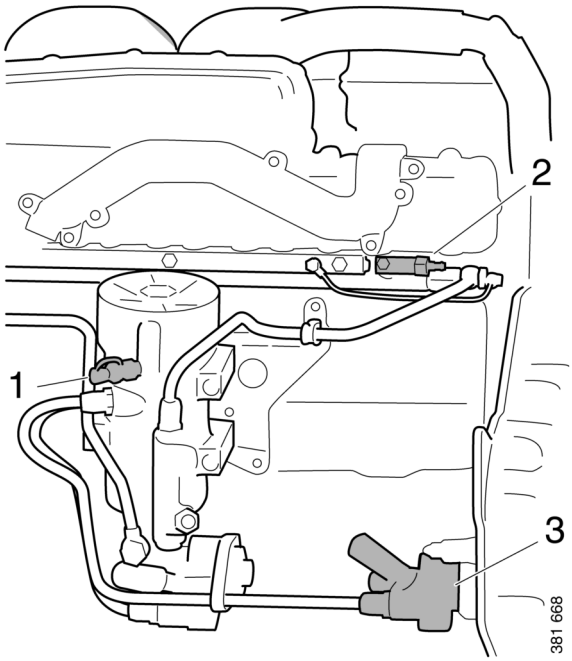

1. Fuel filter housing bleed nipple.

2. Fuel manifold bleed nipple.

3. Hand pump.

© Scania CV AB 2025, Sweden

Renewing the fuel tank venting filter

1. Remove the hose from the filter and then remove the filter.
2. Clean around the tank pick-up unit and along the rubber hose.
3. Carefully clean the area on the surface of the tank where the filter is to be fitted. Clean off heavy dirt with water and detergent. Remove grease and oil residue with a degreasing agent. Remove adhesive residue with solvent naphtha or similar.
4. Adjust the tank ventilation connection to the correct position.
5. Wait so that the detergent has time to evaporate before the filter is fitted.
6. Fit the filter to the hose.
7. Remove the protective tape from the fuel filter. Push the filter vertically into position by hand and maintain the pressure for at least 5 seconds.
8. Refit the hose.

Note:

The ventilation filter must be positioned vertically in order to function correctly. Ensure that there are no kinks in the hose or any chafing or over-extension. The ideal fitting temperature of the component parts is 21°C-38°C.

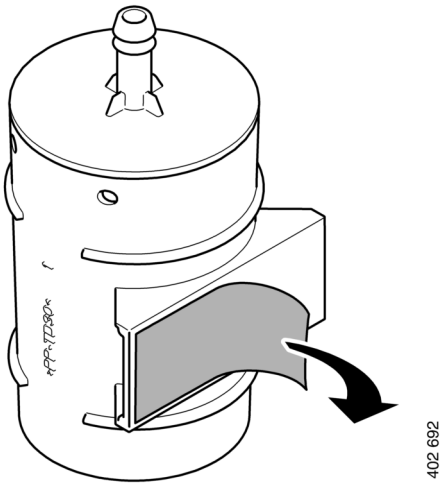

Protective tape on fuel filter.

© Scania CV AB 2025, Sweden

Other

Checking the drive belt

IMPORTANT!

Before starting, make a note of how the drive belt is fitted. Refit the drive belt with the same direction of rotation as it had before removal.

1. Check the drive belt for cracks. Renew the drive belt if deep cracks have formed.

Note:

Small and shallow cracks are normal and form after only a few hours of operation. They do not mean that the drive belt needs to be renewed. If there are many deep cracks, or if parts of the drive belt have started to come off, the drive belt must then be renewed.

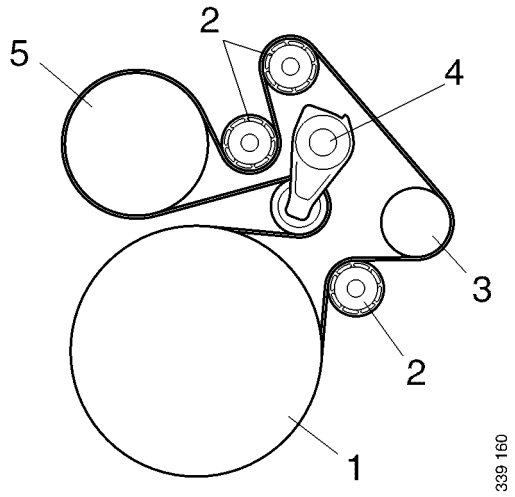

Example of a drive belt.

1. Crankshaft

2. Idler roller

3. Alternator

4. Belt tensioner

5. Coolant pump

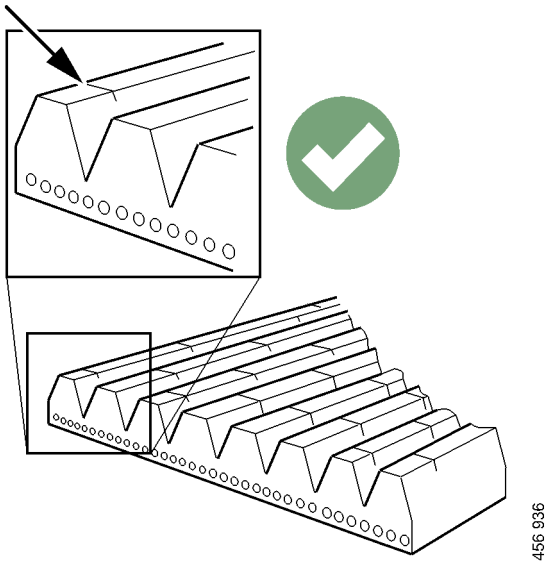

Example of a minor crack in the drive belt. The drive belt can be refitted.

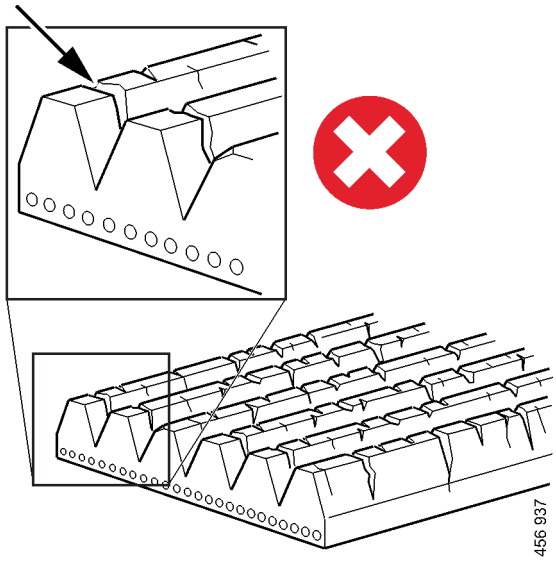

The drive belt has deep cracks and must be renewed.

© Scania CV AB 2025, Sweden

2. Check drive belt wear. Renew the drive belt if it is too worn.

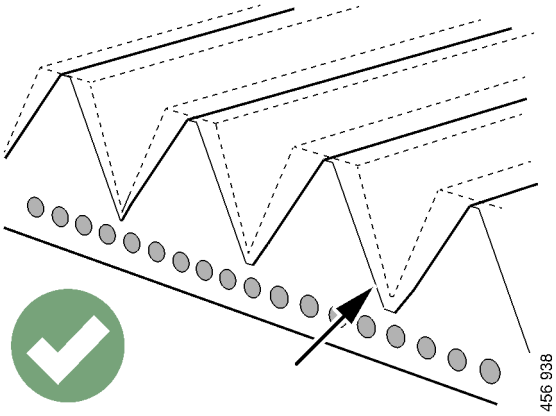

The drive belt is starting to become worn, but can be refitted.

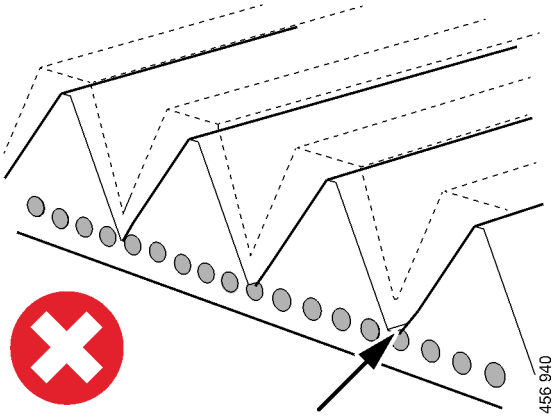

The belt is worn down to the cord. The drive belt must be renewed.

Checking for leakage

IMPORTANT!

If serious leakage occurs, contact your nearest workshop.

1. Start the motor.
2. Check for oil, coolant, fuel, air or exhaust leakage.
3. Tighten or renew leaking connections. Check the overflow holes which show whether the O-rings between the cylinder liners and crankcase are leaking.
4. Check whether the drain hole on the coolant pump is blocked. If there is a leak, renew the pump seal or the entire coolant pump.

© Scania CV AB 2025, Sweden

Checking and adjusting the valve clearance and unit injectors

Special tools

Number	Designation	Figure
99 309	Turning tool for rotating the flywheel from below	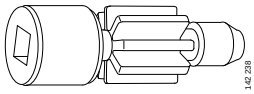
2 402 509	Turning tool for rotating the flywheel from above	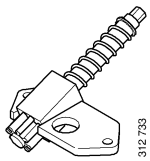
99,442	Setting tool	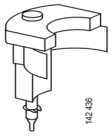

Other tools
Torque wrench, 0-50 Nm
Waterproof felt-tip pen
0.45 and 0.70 mm feeler gauges
Flash light
Mirror

© Scania CV AB 2025, Sweden

WARNING!

Block the starting device. If the engine starts unexpectedly, there is a serious risk of injury.

IMPORTANT!

The engine must be cold when the work is carried out.

Remember to remove the turning tool from the flywheel following adjustment.

Note:

Carry out the working without pausing, so that no step is overlooked.

Carry out a check and adjustment of the valve clearances and the unit injectors one more time after the first 500 hours of operation. After this, adjustment according to the regular interval takes place, which is every 2,000 operational hours.

The reference information UP TDC,DOWN TDC and the angle indications listed in the table below are engraved on the flywheel. Depending on the engine installation, this information is visible in one of the windows, either furthest up or furthest down on the flywheel. See illustration.

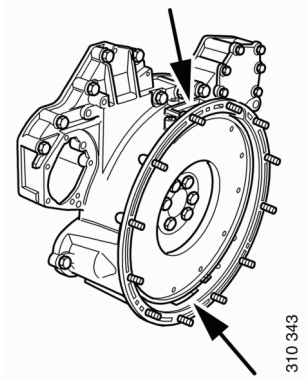

Upper and lower window to read the engraving on the flywheel.

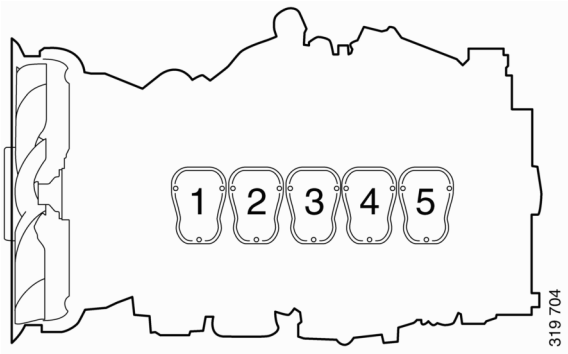

Order of cylinders.

© Scania CV AB 2025, Sweden

Workflow table

Adjust valves and unit injectors according to the table below. Follow the respective column depending on whether you are reading the engraving on the flywheel in the lower or the upper window. Start adjustment at the top of the table.

Reading in the lower window	Rotation	Valve transition on cylinder	Adjust valves on cylinder	Adjust injector on cylinder	Reading in the upper window
DOWN TDC	1		1	2	UP TDC
72/432	1	5			252/612
144/504	1		2	4	324/684
216/576	1	3			36/396
288/648	1		4	5	108/468
DOWN TDC	2	1			UP TDC
72/432	2		5	3	252/612
144/504	2	2			324/684
216/576	2		3	1	36/396
288/648	2	4			108/468

© Scania CV AB 2025, Sweden

Checking and adjusting the valve clearance

Valve clearance, specifications	
Intake valve	0.45 mm (0.018 in)
Exhaust valve	0.70 mm (0.028 in)

Tightening torque	
Lock nut for valves	35 Nm (26 lb/ft)

1. Clean the rocker covers and the area around them.
2. Remove the rocker covers.
3. Use the turning tool appropriate to the installation of the engine. Tool 99 309 is used to rotate the flywheel from the underside of the engine and tool 2 402 509 is used from the top side.
4. Start adjusting one cylinder according to the table. Rotate the flywheel until the correct engraving can be read on the flywheel. It may be necessary to rotate it more than 1 revolution.

   Rotate the flywheel in the rotational direction of the engine, which is clockwise viewed from the front of the engine and anticlockwise viewed from the back of the engine.

   During a valve transition, the exhaust valve (the long arm) is closing at the same time as the intake valve is opening.

   The UP TDC engraving on the flywheel is now visible in the window furthest up on the flywheel. The DOWN TDC engraving is visible in the lower window.
5. Read Workflow table on the previous page to see which valve to adjust.
6. Stick the feeler gauge under the pressure pad of the rocker arm and check the valve clearance.
7. If necessary, adjust the valve clearance by
   a) loosening the lock nut on the end of the rocker arm
   b) adjusting the valve clearance with the adjusting screw
   c) tighten the lock nut.
8. Mark the rocker arm with the felt-tip pen and adjust the unit injector according to the next section. Then continue on to the next cylinder according to the table.

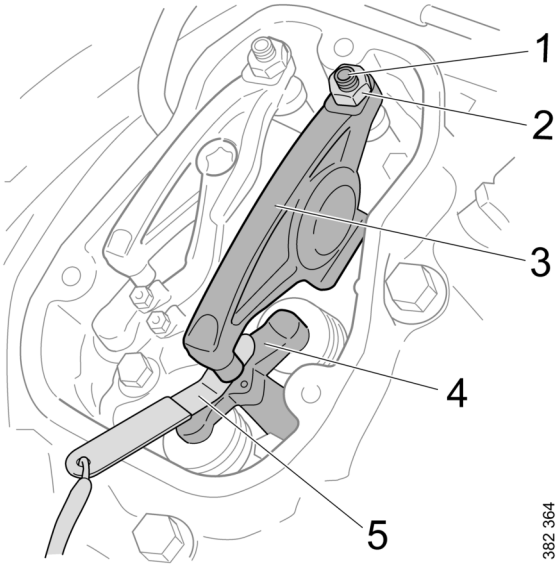

1.Adjustment screw

2. Lock nut

3. Rocker arm

4. Valve bridge

5. Feeler gauge

© Scania CV AB 2025, Sweden

Checking and adjusting the unit injectors

Tightening torque	
Lock nut for unit injectors	39 Nm (29 lb/ft)

1. Read Workflow table to see which injector to adjust.
2. Fit the setting tool with the metal plate around the unit injector.

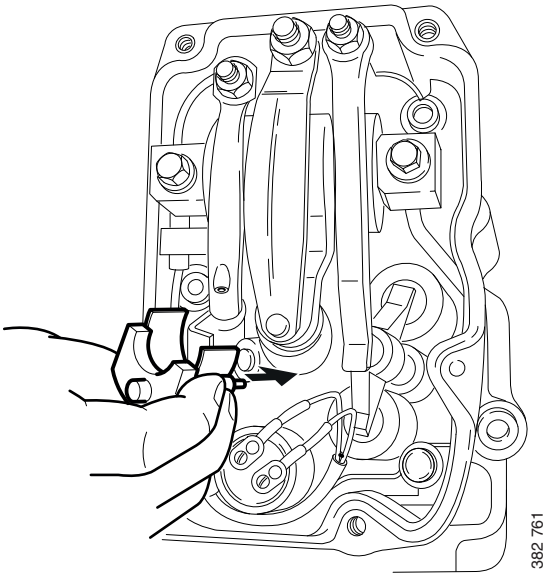

The unit injector is correctly set when the small piston (1) is level with the flat upper surface of the tool. Use a finger to check. You can feel very small differences. See also the illustrations on the next page.

3. If necessary, adjust the unit injector by
   a) loosening the lock nut (2)
   b) adjusting the unit injector using the adjusting screw (3)
   c) tighten the lock nut.

IMPORTANT!

Remove the setting tool when the adjustment is done.

4. Mark the injector with the felt-tip pen and continue adjustment according to the table.

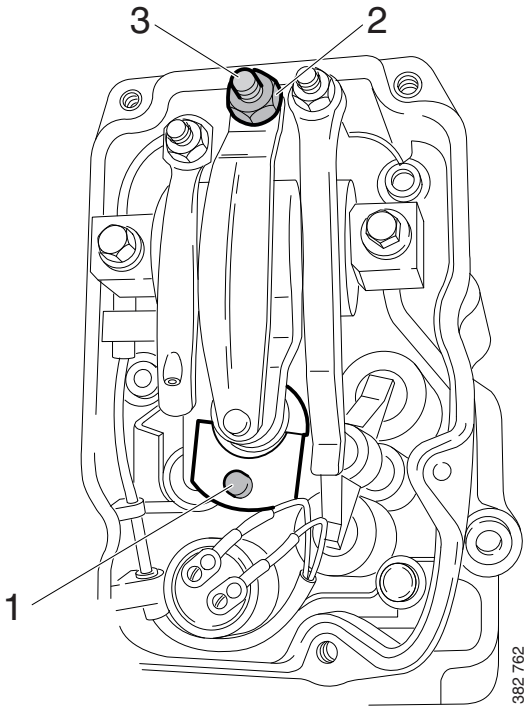

© Scania CV AB 2025, Sweden

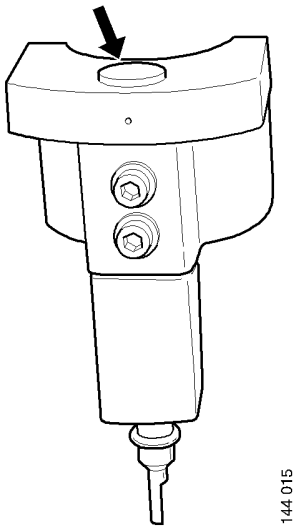

The setting tool piston is above or below the flat upper surface of the tool. Adjust the unit injector.

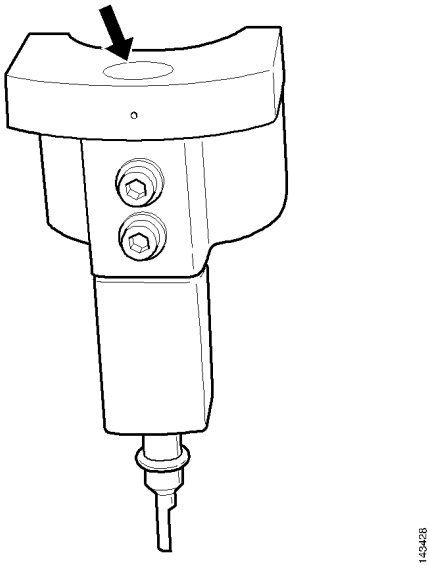

The setting tool piston is level with the flat upper surface of the tool. The unit injector is correctly adjusted.

© Scania CV AB 2025, Sweden

Quality requirements for fuel

Quality requirements and testing standards for the most important properties of different types of fuel are described in the Workshop Manual. This can be ordered from Scania dealers or directly from Scania.

Diesel

Characteristics

The quality of the diesel is very important for the operation and service life of the engine and the fuel system, and also for the engine performance.

REQUIREMENT!

The diesel should comply with the requirements of European standards EN590 or EN15940.

However, Scania accepts larger tolerances of certain properties. Please see the table below.

Characteristic	Requirements
Viscosity at 40°C (104°F)	1.4-4.5 cSt
Density at 15°C (59°F)	0.79-0.87 kg/dm^3
Ignitability (CET rating)	minimum 49
Lowest flashpoint	56°C (132°F)
Particulate contamination level	Classification 22/20/17 according to ISO 4406

© Scania CV AB 2025, Sweden

Permitted sulphur content in diesel

IMPORTANT!

The operator is responsible for using the correct type of diesel to ensure that local laws are complied with.

Engine type	Max. sulphur content	Note
Engines without EGR system	4,000 ppm (0.4%)	If the sulphur content is higher than 2,000 ppm, the oil change intervals must be halved. A higher sulphur content than 4,000 ppm is not permitted, since this will result in engine damage.
Engines with EGR system	350 ppm (0.035%)	If diesel with too high a sulphur content is used, this causes engine damage.

Temperature dependence of diesel

IMPORTANT!

Mixing kerosene or other paraffins with the diesel is prohibited. The injectors may be damaged.

It is not permissible to mix petrol with diesel. In the long term petrol can cause wear in the injectors and engine.

At temperatures lower than those specified for the diesel, paraffin wax may precipitate from the diesel and block filters and pipes. The engine can then lose power or stop.

The diesel is adapted for use in the specific climate of each country. If an engine is to be operated in a temperature zone with a temperature lower than normal, first identify the temperature properties of that particular diesel.

© Scania CV AB 2025, Sweden

Use of fuel oil in stand-by generator sets

Long-term storage of diesel, where the diesel comes into contact with water, may lead to the growth of micro organisms (bacteria and fungus). To avoid this in fuel used in stand-by generator sets, Scania permits the use of fuel oil according to DIN 51603-1 and ÖNORM C 1109.

Use of fuel oil is only permitted for stand-by generator sets and under the following conditions:

- The fuel must not be stored or used in temperatures under -10°C (14°F).
- The engine may not be fitted with an SCR system.

© Scania CV AB 2025, Sweden

Biodiesel (FAME)

Use of biodiesel

IMPORTANT!

For engines with SCR systems, a maximum of 10% mixture of biodiesel should be used.

Scania uses the term biodiesel to refer to a renewable diesel made from greases or oils and methanol. The biodiesel should conform to the requirements of European standard EN 14214 or Brazilian standard ANP-45. For biodiesel in accordance with EN 14214 or ANP-45, the generic term FAME is frequently used.

Normal diesel in accordance with EN 590 can contain up to 7% biodiesel from the diesel supplier. There are grades of diesel that comply with EN 590 but contain a higher mixture of biodiesel.

For PDE engines, Scania approves the use of up to 100% biodiesel in accordance with EN 14214 or ANP-45.

Storage of biodiesel

IMPORTANT!

Biodiesel must not be stored for more than 6 months.

Biodiesel has a maximum storage life of 6 months from the date of production to the expiry date. Biodiesel is affected by light, temperature, water, etc. during storage, which affects the characteristics and durability of the biodiesel.

Biodiesel also has lower stability against oxidation than diesel. This can result in a thickening of the biodiesel and blocking of parts of the fuel system, e.g. the fuel filter. Bacterial growth can occur when biodiesel is stored in a tank in unfavourable conditions. Avoid storage in barrels or auxiliary tanks, except when fuel turnover rates are high. Check tank cleanliness whenever refuelling takes place.

If the engine has been refuelled with biodiesel, and is stationary for a long period, condensation water can form in the fuel tank resulting in bacterial growth.

See also the section Preservative fuel.

Renewable diesel (HVO)

HVO is a synthetic diesel which is manufactured through the hydrogenation of plants and animal fats. To the user, HVO is reminiscent of diesel in accordance with EN590, apart from HVO having a somewhat lower density.

Scania approves the use of up to 100% HVO for all engines in accordance with the European standard EN 15940.

Gas-to-liquids (GTL)

GTL is a synthetic fuel that is often refined from natural gas. To the user, GTL is reminiscent of diesel in accordance with EN590, apart from GTL having a somewhat lower density and less odour.

Scania approves the use of up to 100% GTL in accordance with the European standard EN 15940.

© Scania CV AB 2025, Sweden

Preparing the engine for storage

Note:

The engine should be stored indoors, in a temperature-controlled room with constant (or near constant) temperature, protected from dirt and dust.

If the engine is not being used for an extended period its cooling system, fuel system and combustion chamber and outside must be protected against rust.

On delivery, the engine is protected by so-called VCI plastic. Provided that the VCI bag is intact and has not been removed, the engine can be stored for 3 years without any action required. After 3 years, the engine must be preserved again and the battery must be renewed.

The interval between each new Preparing for storage is then 24 months and the bag is renewed.

The VCI bag must be inspected at least once a year. If the plastic is missing or broken, it must be replaced with a new one immediately.

An alternative to preparing the engine for long-term storage is to start the engine and warm it up every 6 months.

Preparation means that the following measures are taken:

- The engine is cleaned thoroughly.
- Run the engine for a specific period using special preservative fuel, oil and coolant.
- Otherwise prepare the engine for storage (filter renewal, lubrication, etc.).

Preservative products

Preservative oil

Use a normal engine oil that meets the requirements in the Oil grade section.

Preservative coolant

Use coolant containing 50% by volume of glycol. Example: BASF MPG Glysacorr P113 and Valvoline Zerex P113 FP.

WARNING!

Ethylene glycol can be fatal if ingested and can cause skin irritation and eye damage.

Preservative fuel

Preservative fuel must not contain biodiesel. Even small amounts of 5-10% biodiesel can have adverse effects on the engine when in long-term storage.

Long-term storage of diesel, where the diesel comes into contact with water, may lead to the growth of micro organisms (bacteria and fungus).

In order to minimise the growth of micro-organisms, preservative fuel should contain the following additives. The additives should be selected and added by the fuel supplier.

Preservative fuel should comply with the following requirements:

- 0% biodiesel.
- Max. sulphur content 50 ppm.
- Max. water content 200 ppm.
- The fuel must contain additives to stop the growth of micro-organisms.

© Scania CV AB 2025, Sweden

Preparations for storage

Environment

Use a suitable container. Used oil and coolant must be disposed of as specified in national and international laws and regulations.

Note:

Do not remove the injectors.

1. Remove plugs and tape from the coolant connections, air intake and exhaust pipe.
2. Drain the oil.
3. Renew the oil filter and fuel filter.
4. Clean the centrifugal oil cleaner.
5. Fill with engine oil to the minimum level on the oil dipstick.
6. Drain and flush the cooling system of any old coolant.
7. Top up with preservative coolant.
8. Mix preservative fuel in a can. Detach the fuel pipe at the feed pump suction line and connect a hose from the can.
9. Detach the fuel pipe at the overflow valve and connect a return hose to a separate can.
10. Connect and bleed the fuel system.
11. Start the engine and run it at about 1,100 rpm for 20 minutes.
12. Remove the rocker covers and lubricate the valve mechanisms with pushrods and the valve tappets, as well as the injector mechanism, using a liberal amount of preservative oil. Refit the rocker covers.
13. Drain the coolant if the engine is not to be stored with coolant in the system. Plug and tape all coolant connections if the engine is to be stored without coolant in the cooling system.
14. Renew the filter element in the air cleaner.
15. Cover the air intake and exhaust pipe.
16. Spray the alternator and starter motor with water-repellent anti-corrosive oil: CRC 226, LPS1 or the equivalent.
17. Spray the outside of smooth engine parts, first with penetrating preservative oil such as Dinitrol 25B and then with Dinitrol 112 or equivalent.
18. Clearly mark the engine with the storage preparation date, and state that the engine must not be started or cranked.

© Scania CV AB 2025, Sweden

Batteries

WARNING!

Wear protective gloves and eye protection when charging and handling batteries. The batteries contain a highly corrosive acid.

Remove the batteries and trickle charge them at the battery charging station. This does not apply to batteries specified as maintenance-free by the manufacturer.

The same applies to short-term storage, even if the engine has not been prepared for storage as above.

Storage

After the preparation, the engine should be stored indoors in a dry location at room temperature. The engine must be packed in packaging made of VCI plastic to protect against dust, dirt and moisture.

When the engine is to be taken into operation again

1. Remove plugs and tape from the coolant connections, air intake and exhaust pipe.
2. Fill the cooling system with coolant.
3. Drain the preservative oil.
4. Renew the oil filter and fuel filter.
5. Fill with new engine oil.
6. Remove the rocker covers and lubricate the valve mechanisms with pushrods and the valve tappets, as well as the injector mechanism, using a liberal amount of oil. Refit the rocker covers.
7. Drain the preservative fuel from the fuel manifold.
8. Connect and bleed the fuel system.
9. Wash off any preservative oil on the outside using white spirit.

© Scania CV AB 2025, Sweden

Technical data

General data

Number of cylinders and configuration	5, straight
Working principle	4-stroke engine
Cylinder diameter (mm/in)	130/5.12
Piston stroke (mm/in)	140/5.51
Displacement (dm^3/in^3)	9.3/567.5
Firing order	1 - 2 - 4 - 5 - 3
Compression ratio	16:1[1]
Engine direction of rotation viewed from rear	Anticlockwise
Fan direction of rotation viewed from front	Clockwise
Cooling	Coolant
Valve clearances, cold engine	
Intake valve (mm/in)	0.45/0.02
Outlet valve (mm/in)	0.70/0.03
Number of teeth on the flywheel	158
Low idling (rpm)	500-975
Maximum full-load speed (rpm)	1,800/2,100
Fuel	Diesel
Approximate weight, without coolant and oil (kg/lb)	950/2,094

1. For engines with performance and certification code 076, the compression ratio is 18:1.

Lubrication system

Oil volume	See Maintenance
Oil cleaning	Centrifugal oil cleaning
Oil cooler	Coolant cooled, full flow
Oil filter	Paper filter from Scania
Interval between oil changes (h)	500
Oil pressure (bar/psi)	
Normal with the engine at operating temperature, operating speed	3-6/43.5-87
Minimum permitted at idling speed	0.7/10.2
Crankcase pressure with closed crankcase ventilation (mbar/psi)	-5.4 to 2.0/-0.08 to 0.03

© Scania CV AB 2025, Sweden

Intake system

Permissible pressure drop in the intake system with cleaned or new filter (mbar/psi)	30/0.44
Permissible pressure drop in the intake system with blocked (dirty) filter (mbar/psi)	65/0.94

Cooling system

Coolant	See chapter Coolant
Coolant volume, excluding radiator (dm^3/US gallons)	
DC09 071A	16/4.2
Other engine types	15/4.0
Coolant volume including 1.1 m^2 radiator (dm^3/US gallons)	
DC09 071A	38/10.0
Other engine types	37/9.8
Coolant temperature (°C/°F)	90-95/194-203
Number of thermostats	1
Thermostat opening temperature (°C/°F)	80/176 and 87/189

Fuel system

Injection system	PDE (unit injector)
Engine management system	EMS
Fuel filter	Paper filter from Scania
Water separating prefilter	Paper filter from Scania
Filter for tank venting	Paper filter from Scania

Electrical system

Type	1-pin, 24 V, DC
Starter motor, standard equipment	1-pin, 24 V, 6 kW
Alternator, standard equipment	1-pin, 28 V, 100 A

© Scania CV AB 2025, Sweden

Tightening torque for screw joint

Screws and nuts

Hexagon screws, hexagon socket screws, Torx screws, hexagon nuts

Metric thread. Strength class 8.8/8.

Thread	Tightening torque	
	Nm	Lb-ft
M4	2.9	21
M5	6	4
M6	9.5	7
M8	24	18
M10	47	35
M12	84	62
M14	135	100
M16	210	155
M18	290	214
M20	420	310
M22	580	428
M24	730	538

Flange screws with hexagonal head and hexagonal flange nuts

Metric thread. Strength class 8.8/8.

Thread	Tightening torque	
	Nm	Lb-ft
M5	6.7	5
M6	10.2	8
M8	26	19
M10	50	37
M12	92	38
M14	149	110
M16	184	136

© Scania CV AB 2025, Sweden

Hose clamps

Specifications in the tables show tightening torque when tightening by hand.

Note:

The maximum tightening torque for a new unfitted hose clamp is 1 Nm (0.7 lb-ft).

A = width (mm)	Tightening torque	
	Nm	Lb-ft
7.5-9	1.5	1
12	5	4
20	10	7
25	20	15

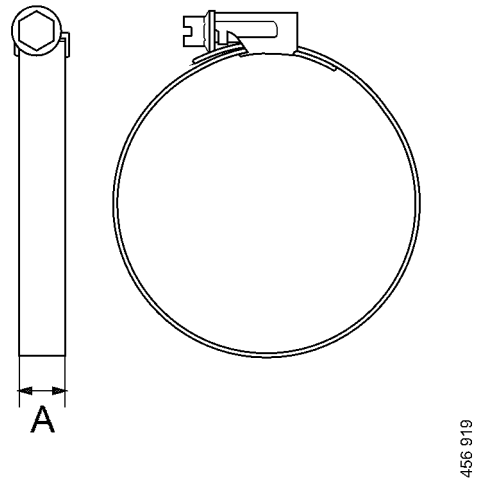

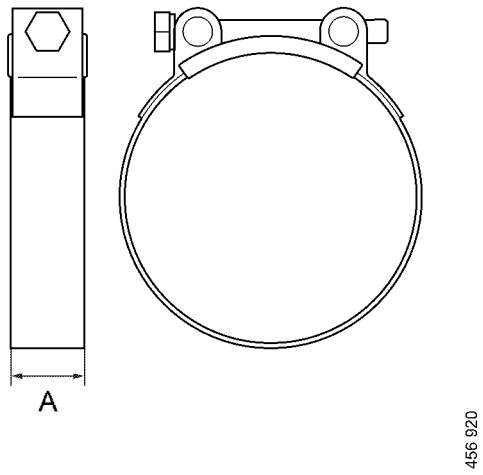

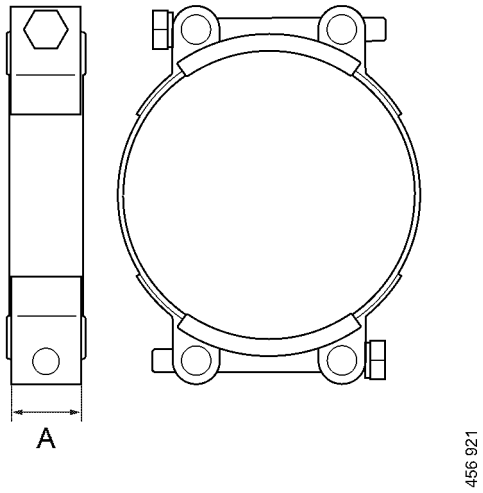

© Scania CV AB 2025, Sweden

Scania Assistance

Wherever you are, you can always get assistance from Scania's service organisation, Scania Assistance, 24 hours a day, every day of the year.

Always call the contact for your country.

Country	Tel.
Austria	+43 1 256 44 11
America	+1 (0) 800 272 2642
America	1 800 272 2642
Argentina	800,999,722,642
Australia	+611300722642
Belgium	+32 2 264 00 00
Botswana	+267 72 102 591
Brazil	+8000194224
Bulgaria	+359 88 666 0001
Chile	188,800,722,642
Colombia	+1800184548
Czech Republic	+420,225,020,225
Denmark	+45 333 270 44
Estonia	Tallinn: +372 5153 388
Estonia	Tartu: +372 5126 333
Estonia	Pämu: +372 5071 477
Estonia	Rakvere: +372 5074 655
Finland	+358 10 555 24
France	+33 2 414 132 32
Germany	+49 261 887 8888
Great Britain	0 800 800 660
Great Britain	+441274301260
Hungary	+36,209,727,197
Ireland	+353 71 963 4000
Italy	+39046 1996222
Latvia	+46 8 52 24 24 24

Country	Tel.
Latvia	+371 29 44 24 24
Lithuania	+46 8 52 24 24 24
Luxembourg	+32 2 264 00 00
Malaysia	1800 08 8500
Malaysia	+6035590907
Mexico	+543327451092
Morocco	+3222640000
Namibia	+264634461352
Netherlands	+31 76 52 54 111
Norway	+47 223 217 00
Peru	0800-51-727
Peru	(01)512-1877
Poland	+48 22 331 22 33
Portugal	+34 91 678 9247
Romania	+40 723 27 27 26
Russia	+7(495) 925 77 75
Singapore	+6565917180
Slovakia	+421,903,722,048
South Africa	0 800 005 798
South Africa	+27 11 226 5005
Spain	+34 91 678 80 58
Sweden	+46 42 100 100
Switzerland	+41 800 55 24 00
Thailand	+66819397525
Thailand	+1800 019 88
Uruguay	0 800 835 1

Other countries: +46 8 52 24 24 24

Note:

Calls will be recorded for training purposes.

© Scania CV AB 2025, Sweden